TENNESSEE
Hamblen County
SERVICE • COMMUNITY • INDUSTRY
OFFICE OF THE MAYOR

DATE: June 13, 2022

TO: Hamblen County Legislative Body

FROM : Bill Brittain, Hamblen County Mayor

RE: **June 2022 Committee Meeting Information**

Monday, June 13, 2022 at 5:30 p.m.-Large Courtroom-Hamblen County Courthouse

- **Finance Committee**
- **Personnel Committee-** *Immediately following the adjournment of the Finance Committee*
- **Public Services Committee-***Immediately following the adjournment of the Personnel Committee*
- **Calendar and Rules Committee -** *Immediately following the adjournment of the Public Services Committee*

Bill Brittain, *County Mayor*
511 West Second North Street • Morristown, TN 37814 • *office.* 423.586.1931 • *fax.* 423.585.4699
www.HamblenCountyTN.gov • *email.* bbrittain@co.hamblen.tn.us

TENNESSEE
Hamblen County
SERVICE • COMMUNITY • INDUSTRY
FINANCE COMMITTEE

Randy DeBord
Chairman

Chris Cutshaw
Vice-Chairman

Howard Shipley
Ex-Officio

Eileen Arnwine
Member

Thomas Doty
Member

Tim Goins
Member

Joe Huntsman, Sr.
Member

Mike Reed
Member

James Stepp
Member

Hamblen County Government

FINANCE COMMITTEE

Monday, June 13, 2022
Large Courtroom – Hamblen County Courthouse

AGENDA

Call to Order – *Chairman Randy DeBord*

1. **Visitors Wishing to Address the Committee About Agenda Items Only** – *Chairman Randy DeBord* (*Visitors will be allotted 5 minutes to speak)*

2. **Recurring Business –** *Chairman Randy DeBord*
   a. Expenditure Reports – May 2022 (*Information Only-No Action Necessary*)
   b. Review/Acceptance of Monthly Checks May 2022 (*Submitted by the County Mayor's Office)*

3. **Old Business** – *Chairman Randy DeBord*
   a. None

4. **New Business** – *Chairman Randy DeBord*
   a. Request to Purchase Property for Landfill, *County Mayor Bill Brittain*
   b. Justice Center Project-*Tony Pettit, Project Manager-BurWil Construction Company*
      i. Monthly Report
      ii. CO #3 and #4
      iii. CO Request from BurWil
      iv. Laundry Equipment Purchase
   c. Body Scanner Purchase with Opioid Settlement Funds-*County Mayor Bill Brittain*
   d. Resolution 22-___ A Resolution Authorizing Hamblen County to Increase the Threshold Required for Sealed Competitive Bids and Proposals-*County Mayor Bill Brittain*
   e. Bid Tabulation-New, Non Refurbished Personal Computers (2022-19)-*County Mayor Bill Brittain*
   f. Banking Contract- *Trustee Scotty Long*
   g. Budget Amendments-*Finance Director-Anne Bryant-Hurst*
      i. Hamblen County Board of Education Budget Amendment #7-Code Changes-*HCBOE Business Supervisor Traci Antrican*
      ii. Fund #101- Capital Projects $325,000
      iii. Fund #101- Drug Court $10,000
      iv. Fund #101- Sheriff's Department $13,775
      v. Fund #101- EMA $861.88
      vi. Fund #101- Parks and Fair Boards $6,500
      vii. Fund #101- Maintenance, Juvenile, Sheriff's Department $30,350
      viii. Fund #116- Garbage/Sanitation Department $4,200
      ix. Fund #131- Highway Department $9,200
      x. Fund #101-Geographical Information Systems $1,185

5. **Items of Interest (No Action Necessary)** – *Chairman Randy DeBord*
   a. Planning Commission Building Permit Report- May 2022
   c. County Attorney Invoices – May 2022
   d. Coroner's Monthly Report – May 2022
   e. Budget Amendments- *Finance Director-Anne Bryant-Hurst*
      i. Fund #101-Register of Deeds $2,317
      ii. Fund #101-Property Assessor's Office $350
      iii. Fund #101-Parks and Fair Boards $1,460
      iv. Fund #101-Jail $3,000
      v. Fund #101-Jail $2,000
      vi. Fund #101-Capital Projects $5,000
      vii. Fund #101-EMA $1,409.38
      viii. Fund #101-EMA $1,150
      ix. Fund #101-Sheriff's Department $2,200
      x. Fund #101-Jail $3,000

f. Hamblen County Department of Education Quarterly Expenditure Report-Third Quarter 2021-2022
g. Jail/Justice Center Project Expenditures as of May 31, 2022

6. **Adjournment** – *Chairman Randy DeBord*

EXPENDITURE REPORTS

MAY 2022

Return to Committee Cover

EXPENSE SUMMARY REPORT

May 2021-2022

HAMBLEN COUNTY ACCOUNTS & BUDGETS

101 General Fund

Fund(s) Selected:
101

Account Group	Budget Amount	Budget Amendments	Amended Budget	MTD Expenses	YTD Expenses	Outstanding Encumbrances	Unencumbered Balance	% Bdgt Remain
51100 County Commission	181,682.00	100.00	181,782.00	36,780.86	152,364.63	260.00	29,157.37	16.04%
51210 Board Of Equalizaton	5,550.00	0.00	5,550.00	0.00	0.00	0.00	5,550.00	100.00%
51300 County Mayor/Executive	239,291.00	186.35	239,477.35	18,942.49	205,024.31	2,907.43	31,545.61	13.17%
51400 County Attorney	31,293.00	0.00	31,293.00	107.66	16,593.62	0.00	14,699.38	46.97%
51500 Election Commission	311,709.00	0.00	311,709.00	45,645.99	244,332.04	1,490.42	65,886.54	21.14%
51600 Register Of Deeds	373,281.00	0.00	373,281.00	34,498.66	317,273.31	1,827.46	54,180.23	14.51%
51720 Planning	257,688.00	1,362.00	259,050.00	18,207.37	217,941.91	2,543.11	38,564.98	14.89%
51750 Codes Compliance	59,336.00	0.00	59,336.00	4,834.13	51,682.31	0.00	7,653.69	12.90%
51760 Geographical Information Systems	92,845.00	0.00	92,845.00	4,838.29	48,150.78	0.00	44,694.22	48.14%
51810 Other Facilities	895,242.00	2,255.00	897,497.00	36,267.98	701,648.02	22,804.52	173,044.46	19.28%
51910 Preservation Of Records	21,486.00	8,680.00	30,166.00	1,708.78	16,419.07	2,826.53	10,920.40	36.20%
52100 Accounting And Budgeting	504,933.00	0.00	504,933.00	38,602.96	428,995.61	203.07	75,734.32	15.00%
52300 Property Assessor's Office	362,478.00	0.00	362,478.00	29,440.85	317,893.51	520.28	44,064.21	12.16%
52310 Reappraisal Program	177,884.00	635.00	178,519.00	19,541.64	95,999.59	1,735.49	80,783.92	45.25%
52400 County Trustee's Office	390,575.00	0.00	390,575.00	31,231.31	316,174.71	3,130.81	71,269.48	18.25%
52500 County Clerk's Office	693,682.00	10,000.00	703,682.00	58,517.42	568,233.45	6,113.86	129,334.69	18.38%
52600 Data Processing	155,204.00	0.00	155,204.00	27,165.37	114,625.30	27,817.15	12,761.55	8.22%
52900 Other Finance	335,828.00	0.00	335,828.00	27,529.58	290,356.80	448.33	45,022.87	13.41%
53100 Circuit Court	1,011,539.00	-17,704.75	993,834.25	66,160.54	771,824.54	30,862.55	191,147.16	19.23%
53300 General Sessions Court	462,498.00	139,675.00	602,173.00	46,299.21	448,069.19	829.03	153,274.78	25.45%
53330 Drug Court	77,583.00	13,500.00	91,083.00	6,285.29	57,016.06	13,276.84	20,790.10	22.83%
53400 Chancery Court	405,176.00	3,415.00	408,591.00	34,588.49	342,624.97	2,542.90	63,423.13	15.52%
53500 Juvenile Court	325,026.00	38,670.00	363,696.00	25,112.16	259,541.89	4,323.36	99,830.75	27.45%
53920 Courtroom Security	908,006.00	0.00	908,006.00	48,804.52	623,118.10	9,703.89	275,184.01	30.31%

Return to Committee Cover

EXPENSE SUMMARY REPORT

May 2021-2022

HAMBLEN COUNTY ACCOUNTS & BUDGETS

101 General Fund

Fund(s) Selected:
101

Account Group	Budget Amount	Budget Amendments	Amended Budget	MTD Expenses	YTD Expenses	Outstanding Encumbrances	Unencumbered Balance	% Bdgt Remain
53930 Victim Assistance Program	156,741.00	0.00	156,741.00	0.00	81,480.88	0.00	75,260.12	48.02%
54110 Sheriff's Department	3,378,559.00	40,233.17	3,418,792.17	242,137.32	2,778,086.71	142,717.86	497,987.60	14.57%
54160 Administration Of The Sexual Offender	6,000.00	0.00	6,000.00	80.40	3,094.43	0.00	2,905.57	48.43%
54210 Jail	4,572,674.00	0.00	4,572,674.00	302,038.44	3,392,618.99	191,019.06	989,035.95	21.63%
54220 Workhouse	97,964.00	0.00	97,964.00	7,562.74	81,756.07	0.00	16,207.93	16.54%
54250 Work Release Program	324,354.00	0.00	324,354.00	15,937.79	266,610.95	2,690.72	55,052.33	16.97%
54310 Fire Prevention And Control	220,000.00	0.00	220,000.00	0.00	220,000.00	0.00	0.00	0.00%
54410 Civil Defense	110,874.00	3,627.04	114,501.04	10,391.88	96,958.22	2,631.14	14,911.68	13.02%
54490 Other Emergency Management	192,001.00	0.00	192,001.00	48,000.25	192,001.00	0.00	0.00	0.00%
54510 Inspection And Regulation	4,877.00	1,455.00	6,332.00	484.44	5,503.13	0.00	828.87	13.09%
54610 County Coroner/Medical Examiner	189,600.00	7,800.00	197,400.00	8,904.33	143,167.06	6,145.70	48,087.24	24.36%
54900 Other Public Safety	20,500.00	23,169.10	43,669.10	0.00	17,949.73	0.00	25,719.37	58.90%
55110 Local Health Center	864,467.00	0.00	864,467.00	51,560.47	582,727.04	3,814.39	277,925.57	32.15%
55120 Rabies And Animal Control	369,885.00	0.00	369,885.00	28,949.63	333,956.16	132.28	35,796.56	9.68%
55140 Nursing Home	5,000.00	0.00	5,000.00	0.00	5,000.00	0.00	0.00	0.00%
55170 Alcohol And Drug Programs	5,500.00	0.00	5,500.00	0.00	4,700.00	0.00	800.00	14.55%
55390 Appropriation To State	115,233.00	0.00	115,233.00	115,233.00	115,233.00	0.00	0.00	0.00%
55590 Other Local Welfare Services	27,500.00	0.00	27,500.00	0.00	25,425.00	0.00	2,075.00	7.55%
55710 Sanitation Management	14,460.00	4,537.00	18,997.00	14,260.06	17,606.62	0.00	1,390.38	7.32%
55900 Other Public Health And Welfare	95,000.00	0.00	95,000.00	19,010.41	61,787.23	0.00	33,212.77	34.96%
56100 Adult Activities	11,600.00	0.00	11,600.00	0.00	11,600.00	0.00	0.00	0.00%
56300 Senior Citizens Assistance	6,500.00	0.00	6,500.00	0.00	6,500.00	0.00	0.00	0.00%
56500 Libraries	301,950.00	0.00	301,950.00	0.00	301,950.00	0.00	0.00	0.00%
56700 Parks And Fair Boards	322,027.00	0.00	322,027.00	24,715.32	253,124.57	4,149.33	64,753.10	20.11%

Return to Committee Cover

EXPENSE SUMMARY REPORT

May 2021-2022

HAMBLEN COUNTY ACCOUNTS & BUDGETS

101 General Fund

Fund(s) Selected:
101

Account Group	Budget Amount	Budget Amendments	Amended Budget	MTD Expenses	YTD Expenses	Outstanding Encumbrances	Unencumbered Balance	% Bdgt Remain
56900 Other Social, Cultural And Recreational	351,000.00	0.00	351,000.00	0.00	351,000.00	0.00	0.00	0.00%
57100 Agricultural Extension Service	166,586.00	5,290.00	171,876.00	85.69	126,855.92	1,875.28	43,144.80	25.10%
57300 Forest Service	1,000.00	0.00	1,000.00	0.00	1,000.00	0.00	0.00	0.00%
57500 Soil Conservation	52,640.00	0.00	52,640.00	4,199.48	46,665.63	0.00	5,974.37	11.35%
57800 Storm Water Management	35,460.00	0.00	35,460.00	635.11	17,136.24	2,283.25	16,040.51	45.24%
58110 Tourism	54,700.00	0.00	54,700.00	50.00	39,110.00	4,900.00	10,690.00	19.54%
58120 Industrial Development	641,000.00	0.00	641,000.00	0.00	585,098.89	0.00	55,901.11	8.72%
58300 Veterans' Services	33,615.00	0.00	33,615.00	2,536.93	27,445.73	139.00	6,030.27	17.94%
58600 Employee Benefits	718,515.00	-2,300.00	716,215.00	994.42	576,557.53	0.00	139,657.47	19.50%
58900 Miscellaneous	295,404.00	0.00	295,404.00	0.00	262,566.60	0.00	32,837.40	11.12%
73300 Community Services	6,000.00	0.00	6,000.00	0.00	5,000.00	0.00	1,000.00	16.67%
91110 General Administration Projects	356,000.00	-2,255.00	353,745.00	0.00	68,924.18	4,800.00	280,020.82	79.16%
91120 Administration Of Justice Projects	0.00	0.00	0.00	0.00	0.00	0.00	0.00	
91130 Public Safety Projects	94,500.00	359,325.00	453,825.00	23,959.00	23,959.00	396,675.77	33,190.23	7.31%
91140 Public Health And Welfare Projects	0.00	0.00	0.00	0.00	0.00	0.00	0.00	
91150 Social, Cultural And Recreation Projects	0.00	0.00	0.00	0.00	0.00	0.00	0.00	
91190 Other General Government Proje	2,447.00	0.00	2,447.00	0.00	0.00	0.00	2,447.00	100.00%
99100 Transfers Out	381,864.00	0.00	381,864.00	422,688.23	422,688.23	0.00	-40,824.23	-10.69%
General Fund #(101)	22,883,812.00	641,654.91	23,525,466.91	2,005,526.89	18,158,748.46	900,140.81	4,466,577.64	18.99%

Return to Committee Cover

MONTHLY CHECKS

MAY 2022

Return to Committee Cover

COMMISSION APPROVAL LISTING

Date/Time: 6/6/2022 1:51:12 PM

ACCT	OB	Name	Date	Check Nbr	Description	Amount Paid
Fund: General Fund #(101)						
51100	305	Audit Services	05/19/2022	1010273685	TN, State of	26,445.00
51100	599	Other Charges	05/12/2022	1010273526	TN County Services Association	150.00
51100		**County Commission**			**Check Count: 2** **Total:**	**26,595.00**
51300	307	Communication	05/04/2022	1010273428	Century Link/Business Services	22.46
51300	307	Communication	05/04/2022	1010273476	Verizon Wireless	74.11
51300	307	Communication	05/12/2022	1010273479	AT&T	90.00
51300	351	Rentals	05/12/2022	1010273483	Canon Solutions America, Inc	192.90
51300	355	Travel	05/04/2022	1010273447	HomeTrust Bank	-60.09
51300	599	Other Charges	05/04/2022	1010273447	HomeTrust Bank	171.34
51300	599	Other Charges	05/12/2022	1010273487	Citizen Tribune	33.73
51300	599	Other Charges	05/12/2022	1010273493	English Mountain Spring Water	7.00
51300	599	Other Charges	05/12/2022	1010273519	South Marketing Group	650.00
51300	599	Other Charges	05/12/2022	1010273526	TN County Services Association	150.00
51300	599	Other Charges	05/26/2022	1010273706	M.A.T.S.	1,000.00
51300		**County Mayor/Executive**			**Check Count: 10** **Total:**	**2,331.45**
51500	193	Election Worker	05/12/2022	1010273533	SALLY N ALLEN	125.00
51500	193	Election Worker	05/12/2022	1010273534	Judy Altom	125.00
51500	193	Election Worker	05/12/2022	1010273535	MARTHA M ANDERSON	125.00
51500	193	Election Worker	05/12/2022	1010273536	John L Ayers	125.00
51500	193	Election Worker	05/12/2022	1010273537	Malcolm M Ayers	125.00
51500	193	Election Worker	05/12/2022	1010273538	Teresa B Ayers	125.00
51500	193	Election Worker	05/12/2022	1010273539	Ronnie Banks	50.00
51500	193	Election Worker	05/12/2022	1010273540	VIRGINIA M BENTLEY	125.00
51500	193	Election Worker	05/12/2022	1010273541	John M Brewer	125.00
51500	193	Election Worker	05/12/2022	1010273542	Linda R Brewer	125.00
51500	193	Election Worker	05/12/2022	1010273543	THOMAS KAY BUCHANAN	155.00

Return to Committee Cover

COMMISSION APPROVAL LISTING

ACCT	OB	Name	Date	Check Nbr	Description	Amount Paid
Fund: General Fund #(101)						
51500	193	Election Worker	05/12/2022	1010273544	Allen M Buell	125.00
51500	193	Election Worker	05/12/2022	1010273545	Anna Elizabeth Campbell	125.00
51500	193	Election Worker	05/12/2022	1010273546	JOCELYN P CAMPBELL	155.00
51500	193	Election Worker	05/12/2022	1010273547	Kelly A Campbell	125.00
51500	193	Election Worker	05/12/2022	1010273548	Kymberly A Campbell	100.00
51500	193	Election Worker	05/12/2022	1010273549	Dawn P Cantwell	125.00
51500	193	Election Worker	05/12/2022	1010273550	Robert J Carter	125.00
51500	193	Election Worker	05/12/2022	1010273551	Gary S Cole	125.00
51500	193	Election Worker	05/12/2022	1010273552	GINGER F COLE	125.00
51500	193	Election Worker	05/12/2022	1010273553	Kimberly H Cole	125.00
51500	193	Election Worker	05/12/2022	1010273554	CAROL J COLLINS	125.00
51500	193	Election Worker	05/12/2022	1010273555	PAULA B COMBS	125.00
51500	193	Election Worker	05/12/2022	1010273556	Christy Cowan	125.00
51500	193	Election Worker	05/12/2022	1010273557	JOYCE A DAMON	125.00
51500	193	Election Worker	05/12/2022	1010273558	RAYMOND G DAMON	155.00
51500	193	Election Worker	05/12/2022	1010273559	Katherine A Davis	125.00
51500	193	Election Worker	05/12/2022	1010273560	DOUGLAS R DIBB	155.00
51500	193	Election Worker	05/12/2022	1010273561	Andrew Dickerson	50.00
51500	193	Election Worker	05/12/2022	1010273562	Jason Dixson	50.00
51500	193	Election Worker	05/12/2022	1010273563	ELIZABETH H DOBBINS	155.00
51500	193	Election Worker	05/12/2022	1010273564	Sonda Marie Dover	125.00
51500	193	Election Worker	05/12/2022	1010273565	Ronald E Dubois	125.00
51500	193	Election Worker	05/12/2022	1010273566	Scott Edwards	50.00
51500	193	Election Worker	05/12/2022	1010273567	Carla Ellison	50.00
51500	193	Election Worker	05/12/2022	1010273568	JANICE L ETTER	125.00
51500	193	Election Worker	05/12/2022	1010273569	RICHARD GLENN FORD	125.00
51500	193	Election Worker	05/12/2022	1010273570	RANDY GARRISON	50.00

Return to Committee Cover

ACCT	OB	Name	Date	Check Nbr	Description	Amount Paid
Fund: General Fund #(101)						
51500	193	Election Worker	05/12/2022	1010273571	SANDY GILBERT	50.00
51500	193	Election Worker	05/12/2022	1010273572	Nancy B Goan	125.00
51500	193	Election Worker	05/12/2022	1010273573	SUSAN H GREENE	125.00
51500	193	Election Worker	05/12/2022	1010273574	SUSAN S GREENE	125.00
51500	193	Election Worker	05/12/2022	1010273575	JAMES W HALE	155.00
51500	193	Election Worker	05/12/2022	1010273576	Pamela A Hall	125.00
51500	193	Election Worker	05/12/2022	1010273577	AMY R HANCOCK	125.00
51500	193	Election Worker	05/12/2022	1010273578	VIRGINIA L HARRIS	125.00
51500	193	Election Worker	05/12/2022	1010273579	JENNIFER F HERNON	125.00
51500	193	Election Worker	05/12/2022	1010273580	DALLAS E HONEYCUTT	155.00
51500	193	Election Worker	05/12/2022	1010273581	Mary E Howard	125.00
51500	193	Election Worker	05/12/2022	1010273582	Dennie D Humphreys	125.00
51500	193	Election Worker	05/12/2022	1010273583	Clifton D Jackson	125.00
51500	193	Election Worker	05/12/2022	1010273584	KATHY ANN JACKSON	125.00
51500	193	Election Worker	05/12/2022	1010273585	Bill James	50.00
51500	193	Election Worker	05/12/2022	1010273586	Tiffany Johnson	50.00
51500	193	Election Worker	05/12/2022	1010273587	Pamela M Kimbrough	125.00
51500	193	Election Worker	05/12/2022	1010273588	VICKI G KING	125.00
51500	193	Election Worker	05/12/2022	1010273589	Sandra Ann Kubis	125.00
51500	193	Election Worker	05/12/2022	1010273590	SUSAN D KUTBAY	125.00
51500	193	Election Worker	05/12/2022	1010273591	Linda Marie Lande	125.00
51500	193	Election Worker	05/12/2022	1010273592	Franklin H Lee	125.00
51500	193	Election Worker	05/12/2022	1010273593	LINDA L LOWE	125.00
51500	193	Election Worker	05/12/2022	1010273594	VICKI M MAHAN	125.00
51500	193	Election Worker	05/12/2022	1010273595	DAVID R MARSHALL	125.00
51500	193	Election Worker	05/12/2022	1010273596	ROBERT MCLENDON	125.00
51500	193	Election Worker	05/12/2022	1010273597	JOE H MEHAFFEY	125.00

Return to Committee Cover

ACCT	OB	Name	Date	Check Nbr	Description	Amount Paid
Fund: General Fund #(101)						
51500	193	Election Worker	05/12/2022	1010273598	Janice F Mills	125.00
51500	193	Election Worker	05/12/2022	1010273599	Ashlee P Munroe	125.00
51500	193	Election Worker	05/12/2022	1010273600	CLARA R OLDEN	125.00
51500	193	Election Worker	05/12/2022	1010273601	CAROL W PETERSON	125.00
51500	193	Election Worker	05/12/2022	1010273602	Samuel Lynn Phillips	155.00
51500	193	Election Worker	05/12/2022	1010273603	Rita Z Purkey	125.00
51500	193	Election Worker	05/12/2022	1010273604	Robert T Purkey	125.00
51500	193	Election Worker	05/12/2022	1010273605	Kathy D Richardson	155.00
51500	193	Election Worker	05/12/2022	1010273606	Tina Harbison Riggs	125.00
51500	193	Election Worker	05/12/2022	1010273607	AMY L ROPER	155.00
51500	193	Election Worker	05/12/2022	1010273608	JERRI F RUCKER	125.00
51500	193	Election Worker	05/12/2022	1010273609	Karen A Scarbro	125.00
51500	193	Election Worker	05/12/2022	1010273610	Suella C Scott	125.00
51500	193	Election Worker	05/12/2022	1010273611	Jeremy Seal	50.00
51500	193	Election Worker	05/12/2022	1010273612	Sandra Seal	50.00
51500	193	Election Worker	05/12/2022	1010273613	Barbara Semeraro	125.00
51500	193	Election Worker	05/12/2022	1010273614	ALAN D SHARP	155.00
51500	193	Election Worker	05/12/2022	1010273615	SHERRY S SHARP	125.00
51500	193	Election Worker	05/12/2022	1010273616	JERRY L SHEPARD	155.00
51500	193	Election Worker	05/12/2022	1010273617	JEFF SIZEMORE	50.00
51500	193	Election Worker	05/12/2022	1010273618	Diana Irene Skidmore	125.00
51500	193	Election Worker	05/12/2022	1010273619	Michael Thomas Skidmore	125.00
51500	193	Election Worker	05/12/2022	1010273620	Deana Smallman-Lloyd	125.00
51500	193	Election Worker	05/12/2022	1010273621	ANGELA G SNODGRASS	125.00
51500	193	Election Worker	05/12/2022	1010273622	Hannah Ann Starnes	125.00
51500	193	Election Worker	05/12/2022	1010273623	Marcia Irene States	125.00
51500	193	Election Worker	05/12/2022	1010273624	GEORGE F STEADMAN	155.00

Return to Committee Cover

ACCT	OB	Name	Date	Check Nbr	Description	Amount Paid
Fund: General Fund #(101)						
51500	193	Election Worker	05/12/2022	1010273625	BUDDIE T STUBBLEFIELD	125.00
51500	193	Election Worker	05/12/2022	1010273626	CHARLES O STUBBLEFIELD	155.00
51500	193	Election Worker	05/12/2022	1010273627	ELIZABETH W STUBBLEFIELD	100.00
51500	193	Election Worker	05/12/2022	1010273628	Jane A Susong	125.00
51500	193	Election Worker	05/12/2022	1010273629	DIANNE TAYLOR	50.00
51500	193	Election Worker	05/12/2022	1010273630	Claudia R Thaxton	125.00
51500	193	Election Worker	05/12/2022	1010273631	RITA E THOMAS	125.00
51500	193	Election Worker	05/12/2022	1010273632	ROSALIND RM THOMPSON	125.00
51500	193	Election Worker	05/12/2022	1010273633	Jean Ann Trent	50.00
51500	193	Election Worker	05/12/2022	1010273634	Linda Sue Wallen Greene	125.00
51500	193	Election Worker	05/12/2022	1010273635	EDITH O WEBB	125.00
51500	193	Election Worker	05/12/2022	1010273636	Joshua Michael Weddington	155.00
51500	193	Election Worker	05/12/2022	1010273637	Louis Weston	50.00
51500	193	Election Worker	05/12/2022	1010273638	Sheila M Wheeler	155.00
51500	193	Election Worker	05/12/2022	1010273639	Jefferson Scott Wilder	125.00
51500	193	Election Worker	05/12/2022	1010273640	Ralph Wilkerson	155.00
51500	193	Election Worker	05/12/2022	1010273641	GERALD L WILKES	125.00
51500	193	Election Worker	05/12/2022	1010273642	Donna M Winstead	125.00
51500	193	Election Worker	05/12/2022	1010273643	Pam G Wisecarver	125.00
51500	193	Election Worker	05/12/2022	1010273644	Lethia M Yeary	125.00
51500	193	Election Worker	05/19/2022	1010273661	Andrew Dickerson	50.00
51500	307	Communication	05/04/2022	1010273428	Century Link/Business Services	1.13
51500	307	Communication	05/12/2022	1010273479	AT&T	20.97
51500	312	Contracts With Private Agencies	05/04/2022	1010273426	Landree Brotherton	1,680.00
51500	312	Contracts With Private Agencies	05/04/2022	1010273446	Justin Hinton	1,650.00
51500	312	Contracts With Private Agencies	05/19/2022	1010273672	Microvote Corporation	4,700.00
51500	332	Legal Notices, Recording And Court Costs	05/12/2022	1010273487	Citizen Tribune	3,411.78

Return to Committee Cover

ACCT	OB	Name	Date	Check Nbr	Description	Amount Paid
Fund: General Fund #(101)						
51500	351	Rentals	05/12/2022	1010273483	Canon Solutions America, Inc	78.65
51500	355	Travel	05/12/2022	1010273507	Steven Lawrence	31.59
51500	435	Office Supplies	05/04/2022	1010273435	Evans Office Supply Co	283.70
51500	435	Office Supplies	05/12/2022	1010273493	English Mountain Spring Water	14.00
51500		**Election Commission**			**Check Count: 123 Total:**	**25,256.82**
51600	307	Communication	05/04/2022	1010273428	Century Link/Business Services	0.44
51600	320	Dues And Memberships	05/12/2022	1010273488	County Officials Association	160.00
51600	435	Office Supplies	05/19/2022	1010273652	Bob Family Enterprises, Inc.	5,654.94
51600	435	Office Supplies	05/26/2022	1010273692	Bob Family Enterprises, Inc.	475.04
51600	709	Data Processing Equipment	05/12/2022	1010273481	Business Information Systems	1,583.01
51600		**Register Of Deeds**			**Check Count: 5 Total:**	**7,873.43**
51720	307	Communication	05/04/2022	1010273428	Century Link/Business Services	5.16
51720	307	Communication	05/04/2022	1010273476	Verizon Wireless	196.98
51720	332	Legal Notices, Recording And Court Costs	05/19/2022	1010273657	Citizen Tribune	37.83
51720	338	Maintenance And Repair Services - Vehicles	05/26/2022	1010273719	Ultimate Shine 3 Minute Express Car Wash	15.00
51720	351	Rentals	05/12/2022	1010273483	Canon Solutions America, Inc	53.63
51720	425	Gasoline	05/04/2022	1010273438	Fuelman	141.48
51720	509	Refunds	05/04/2022	1010273453	Terry Moore	50.00
51720		**Planning**			**Check Count: 7 Total:**	**500.08**
51750	331	Legal Services	05/02/2022	1010273424	Hamblen County Clerk & Master	227.00
51750		**Codes Compliance**			**Check Count: 1 Total:**	**227.00**
51760	355	Travel	05/04/2022	1010273438	Fuelman	43.88
51760		**Geographical Information Systems**			**Check Count: 1 Total:**	**43.88**
51810	307	Communication	05/04/2022	1010273476	Verizon Wireless	287.66

Return to Committee Cover

ACCT	OB	Name	Date	Check Nbr	Description	Amount Paid
Fund: General Fund #(101)						
51810	307	Communication	05/12/2022	1010273479	AT&T	456.08
51810	307	Communication	05/19/2022	1010273648	AT&T	655.48
51810	334	Maintenance Agreements	05/04/2022	1010273454	Murrell Burglar Alarm Co Inc	78.00
51810	335	Maintenance And Repair Service - Buildings	05/04/2022	1010273434	Electrical Technology Recycling	105.23
51810	335	Maintenance And Repair Service - Buildings	05/04/2022	1010273477	Wholesale Supply Group	220.20
51810	335	Maintenance And Repair Service - Buildings	05/19/2022	1010273658	Concrete Materials, Inc.	165.00
51810	335	Maintenance And Repair Service - Buildings	05/19/2022	1010273671	Lowe's	1,938.45
51810	335	Maintenance And Repair Service - Buildings	05/19/2022	1010273677	Sherwin Williams	675.33
51810	335	Maintenance And Repair Service - Buildings	05/19/2022	1010273679	Southeast Landscape Supply	84.00
51810	335	Maintenance And Repair Service - Buildings	05/19/2022	1010273680	Stansberry Paving & Excavating	975.00
51810	335	Maintenance And Repair Service - Buildings	05/26/2022	1010273699	Glenn Gerber	600.00
51810	335	Maintenance And Repair Service - Buildings	05/26/2022	1010273716	T.E.G. Enterprises, Inc	190.00
51810	336	Maintenance And Repair Services - Equipment	05/12/2022	1010273510	NAPA Auto Parts Of Morristown	53.61
51810	338	Maintenance And Repair Services - Vehicles	05/04/2022	1010273457	Porter's Tire Store	15.95
51810	338	Maintenance And Repair Services - Vehicles	05/26/2022	1010273719	Ultimate Shine 3 Minute Express Car Wash	75.00
51810	399	Other Contracted Services	05/12/2022	1010273493	English Mountain Spring Water	29.00
51810	410	Custodial Supplies	05/04/2022	1010273474	Unifirst	181.92
51810	415	Electricity	05/19/2022	1010273674	Morristown Utilities	87.00
51810	425	Gasoline	05/04/2022	1010273438	Fuelman	645.10
51810	434	Natural Gas	05/19/2022	1010273649	Atmos Energy	1,780.08
51810	451	Uniforms	05/04/2022	1010273474	Unifirst	329.00
51810		**Other Facilities**			**Check Count: 21**	**Total: 9,627.09**
51910	351	Rentals	05/19/2022	1010273653	Canon Solutions America, Inc	59.07
51910	435	Office Supplies	05/12/2022	1010273482	Camera Castle	85.00
51910	435	Office Supplies	05/12/2022	1010273506	Cindy Lane	293.45
51910		**Preservation Of Records**			**Check Count: 3**	**Total: 437.52**

Return to Committee Cover

ACCT	OB	Name	Date	Check Nbr	Description	Amount Paid
Fund: General Fund #(101)						
52100	302	Advertising	05/12/2022	1010273487	Citizen Tribune	260.98
52100	302	Advertising	05/12/2022	1010273503	Knoxville News-Sentinel	156.01
52100	302	Advertising	05/12/2022	1010273508	Morristown Signs, Inc	35.00
52100	302	Advertising	05/26/2022	1010273703	Johnna Harrell	17.79
52100	320	Dues And Memberships	05/04/2022	1010273447	HomeTrust Bank	229.00
52100	435	Office Supplies	05/04/2022	1010273435	Evans Office Supply Co	438.36
52100	524	In Service/Staff Development	05/04/2022	1010273447	HomeTrust Bank	344.00
52100		**Accounting And Budgeting**			**Check Count: 6**	**Total: 1,481.14**
52300	307	Communication	05/04/2022	1010273428	Century Link/Business Services	1.78
52300	338	Maintenance And Repair Services - Vehicles	05/04/2022	1010273457	Porter's Tire Store	629.16
52300	338	Maintenance And Repair Services - Vehicles	05/26/2022	1010273719	Ultimate Shine 3 Minute Express Car Wash	30.00
52300	425	Gasoline	05/04/2022	1010273438	Fuelman	320.15
52300	435	Office Supplies	05/04/2022	1010273447	HomeTrust Bank	119.99
52300	435	Office Supplies	05/12/2022	1010273493	English Mountain Spring Water	50.00
52300	435	Office Supplies	05/26/2022	1010273691	Acme Printing Company, Inc	295.00
52300	719	Office Equipment	05/19/2022	1010273660	Dell Marketing LP	823.17
52300		**Property Assessor's Office**			**Check Count: 8**	**Total: 2,269.25**
52310	309	Contracts With Government Agencies	05/26/2022	1010273718	TN, State of	6,026.80
52310	312	Contracts With Private Agencies	05/04/2022	1010273466	Tax Management Associates, Inc	5,700.00
52310	351	Rentals	05/12/2022	1010273483	Canon Solutions America, Inc	60.80
52310	399	Other Contracted Services	05/12/2022	1010273487	Citizen Tribune	159.08
52310		**Reappraisal Program**			**Check Count: 4**	**Total: 11,946.68**
52400	307	Communication	05/04/2022	1010273428	Century Link/Business Services	0.09
52400	349	Printing, Stationery And Forms	05/04/2022	1010273435	Evans Office Supply Co	1,797.96
52400	351	Rentals	05/12/2022	1010273483	Canon Solutions America, Inc	69.04

Return to Committee Cover

ACCT	OB	Name	Date	Check Nbr	Description	Amount Paid
Fund: General Fund #(101)						
52400	435	Office Supplies	05/04/2022	1010273435	Evans Office Supply Co	1,098.00
52400	435	Office Supplies	05/04/2022	1010273447	HomeTrust Bank	689.99
52400	435	Office Supplies	05/12/2022	1010273493	English Mountain Spring Water	15.00
52400	719	Office Equipment	05/04/2022	1010273447	HomeTrust Bank	634.26
52400		**County Trustee's Office**			**Check Count: 5**	**Total: 4,304.34**
52500	307	Communication	05/04/2022	1010273428	Century Link/Business Services	9.14
52500	307	Communication	05/04/2022	1010273476	Verizon Wireless	109.92
52500	307	Communication	05/12/2022	1010273479	AT&T	41.94
52500	349	Printing, Stationery And Forms	05/04/2022	1010273427	Business Information Systems	58.00
52500	349	Printing, Stationery And Forms	05/04/2022	1010273435	Evans Office Supply Co	395.00
52500	351	Rentals	05/12/2022	1010273483	Canon Solutions America, Inc	64.90
52500	355	Travel	05/12/2022	1010273528	TN State Association of County Clerks	100.00
52500	355	Travel	05/26/2022	1010273694	Sharon L Conway	265.50
52500	355	Travel	05/26/2022	1010273696	Rose Elkins	329.85
52500	355	Travel	05/26/2022	1010273704	Peggy Henderson	265.50
52500	355	Travel	05/26/2022	1010273709	Penny Petty	329.85
52500	399	Other Contracted Services	05/26/2022	1010273693	Business Information Systems	165.00
52500	435	Office Supplies	05/04/2022	1010273427	Business Information Systems	264.00
52500	435	Office Supplies	05/04/2022	1010273435	Evans Office Supply Co	23.40
52500	435	Office Supplies	05/12/2022	1010273493	English Mountain Spring Water	29.50
52500		**County Clerk's Office**			**Check Count: 13**	**Total: 2,451.50**
52600	307	Communication	05/04/2022	1010273476	Verizon Wireless	27.80
52600	312	Contracts With Private Agencies	05/04/2022	1010273461	Rix Copies	231.80
52600	312	Contracts With Private Agencies	05/19/2022	1010273676	MUS Fibernet	309.90
52600	312	Contracts With Private Agencies	05/26/2022	1010273721	White Rock Security Group, LLC	1,897.00
52600	317	Data Processing Services	05/04/2022	1010273473	Robert Tucker	79.99

Return to Committee Cover

ACCT	OB	Name	Date	Check Nbr	Description	Amount Paid
Fund: General Fund #(101)						
52600	317	Data Processing Services	05/19/2022	1010273665	GovConnection, Inc.	1,815.79
52600	317	Data Processing Services	05/19/2022	1010273676	MUS Fibernet	745.15
52600	317	Data Processing Services	05/26/2022	1010273700	GovConnection, Inc.	14,532.34
52600	709	Data Processing Equipment	05/04/2022	1010273447	HomeTrust Bank	1,396.02
52600	709	Data Processing Equipment	05/04/2022	1010273476	Verizon Wireless	359.99
52600	709	Data Processing Equipment	05/12/2022	1010273484	CDW Government, Inc	277.47
52600		**Data Processing**			**Check Count: 9**	**Total: 21,673.25**
52900	307	Communication	05/04/2022	1010273428	Century Link/Business Services	2.34
52900	307	Communication	05/12/2022	1010273479	AT&T	79.13
52900	317	Data Processing Services	05/12/2022	1010273509	MUS Fibernet	131.82
52900	330	Operating Lease Payments	05/26/2022	1010273712	Mark Sawyer	2,100.00
52900	335	Maintenance And Repair Service - Buildings	05/12/2022	1010273496	Fish Window Cleaning	27.00
52900	351	Rentals	05/04/2022	1010273458	Quality Waste	27.00
52900	351	Rentals	05/12/2022	1010273483	Canon Solutions America, Inc	48.23
52900	415	Electricity	05/19/2022	1010273674	Morristown Utilities	624.00
52900	435	Office Supplies	05/04/2022	1010273435	Evans Office Supply Co	724.87
52900	435	Office Supplies	05/12/2022	1010273493	English Mountain Spring Water	15.00
52900		**Other Finance**			**Check Count: 10**	**Total: 3,779.39**
53100	194	Jury And Witness Expense	05/26/2022	1010273722	Roger Keith Bennett	20.00
53100	194	Jury And Witness Expense	05/26/2022	1010273723	Sam Ella Blanton	20.00
53100	194	Jury And Witness Expense	05/26/2022	1010273724	Keisha Lashay Copenhaver	20.00
53100	194	Jury And Witness Expense	05/26/2022	1010273725	Tammy Marie Dalton	20.00
53100	194	Jury And Witness Expense	05/26/2022	1010273726	Michelle Lee Graham	20.00
53100	194	Jury And Witness Expense	05/26/2022	1010273727	Traci Viola Jefferson	20.00
53100	194	Jury And Witness Expense	05/26/2022	1010273728	James Herbert Johnston	20.00
53100	194	Jury And Witness Expense	05/26/2022	1010273729	Stacey Marie Jones	20.00

Return to Committee Cover

ACCT	OB	Name	Date	Check Nbr	Description	Amount Paid
Fund: General Fund #(101)						
53100	194	Jury And Witness Expense	05/26/2022	1010273730	Sara Beth Milton	20.00
53100	194	Jury And Witness Expense	05/26/2022	1010273731	Jared Blaine Murphy	20.00
53100	194	Jury And Witness Expense	05/26/2022	1010273732	David Wayne Purkey	25.00
53100	194	Jury And Witness Expense	05/26/2022	1010273733	Joseph Ramsey	20.00
53100	194	Jury And Witness Expense	05/26/2022	1010273734	Ronald Harry Saunders	20.00
53100	194	Jury And Witness Expense	05/26/2022	1010273735	Mandy Mae Saylor	20.00
53100	194	Jury And Witness Expense	05/26/2022	1010273736	Pamela P Smith	20.00
53100	194	Jury And Witness Expense	05/26/2022	1010273737	Tasha Lashaye Summerson	20.00
53100	194	Jury And Witness Expense	05/26/2022	1010273738	Lindsey Michelle Trent	20.00
53100	307	Communication	05/04/2022	1010273428	Century Link/Business Services	10.46
53100	307	Communication	05/04/2022	1010273476	Verizon Wireless	73.96
53100	307	Communication	05/12/2022	1010273479	AT&T	38.32
53100	332	Legal Notices, Recording And Court Costs	05/19/2022	1010273657	Citizen Tribune	62.43
53100	349	Printing, Stationery And Forms	05/19/2022	1010273678	Shred-It	96.00
53100	351	Rentals	05/12/2022	1010273483	Canon Solutions America, Inc	337.66
53100	435	Office Supplies	05/04/2022	1010273435	Evans Office Supply Co	775.49
53100	435	Office Supplies	05/04/2022	1010273447	HomeTrust Bank	187.21
53100	435	Office Supplies	05/04/2022	1010273463	Schwaab Inc	152.24
53100		**Circuit Court**			**Check Count: 26** **Total:**	**2,078.77**
53300	307	Communication	05/04/2022	1010273428	Century Link/Business Services	3.56
53300	351	Rentals	05/12/2022	1010273483	Canon Solutions America, Inc	58.39
53300	399	Other Contracted Services	05/26/2022	1010273714	Snider, Janice	409.16
53300	399	Other Contracted Services	05/26/2022	1010273717	TDMHSAS	800.00
53300	435	Office Supplies	05/04/2022	1010273447	HomeTrust Bank	93.98
53300	435	Office Supplies	05/12/2022	1010273493	English Mountain Spring Water	50.00
53300		**General Sessions Court**			**Check Count: 6** **Total:**	**1,415.09**

Return to Committee Cover

ACCT	OB	Name	Date	Check Nbr	Description	Amount Paid
Fund: General Fund #(101)						
53330	307	Communication	05/04/2022	1010273428	Century Link/Business Services	0.12
53330	307	Communication	05/04/2022	1010273476	Verizon Wireless	73.96
53330	307	Communication	05/12/2022	1010273479	AT&T	192.24
53330	307	Communication	05/12/2022	1010273514	One Step Software Inc.	100.00
53330	322	Evaluation And Testing	05/26/2022	1010273708	New Opportunity Housing	520.00
53330	322	Evaluation And Testing	05/26/2022	1010273710	Christopher M Reiley	600.00
53330	351	Rentals	05/12/2022	1010273483	Canon Solutions America, Inc	63.83
53330	355	Travel	05/12/2022	1010273501	Penny Knight	388.98
53330		**Drug Court**			**Check Count: 8 Total:**	**1,939.13**
53400	307	Communication	05/04/2022	1010273428	Century Link/Business Services	4.91
53400	307	Communication	05/12/2022	1010273479	AT&T	20.97
53400	348	Postal Charges	05/12/2022	1010273489	County Record Services, LLC	7,280.00
53400	351	Rentals	05/12/2022	1010273483	Canon Solutions America, Inc	82.88
53400	435	Office Supplies	05/12/2022	1010273493	English Mountain Spring Water	8.00
53400		**Chancery Court**			**Check Count: 5 Total:**	**7,396.76**
53500	307	Communication	05/04/2022	1010273428	Century Link/Business Services	1.35
53500	307	Communication	05/04/2022	1010273476	Verizon Wireless	132.75
53500	322	Evaluation And Testing	05/04/2022	1010273430	Community Rehabilitation Agencies of TN	424.00
53500	338	Maintenance And Repair Services - Vehicles	05/19/2022	1010273682	Synergy Auto Wash	14.22
53500	351	Rentals	05/12/2022	1010273483	Canon Solutions America, Inc	100.45
53500	422	Food Supplies	05/12/2022	1010273493	English Mountain Spring Water	14.00
53500	425	Gasoline	05/04/2022	1010273438	Fuelman	87.34
53500		**Juvenile Court**			**Check Count: 7 Total:**	**774.11**
53920	716	Law Enforcement Equipment	05/04/2022	1010273447	HomeTrust Bank	3,443.37

Return to Committee Cover

ACCT	OB	Name	Date	Check Nbr	Description	Amount Paid
Fund: General Fund #(101)						
53920		**Courtroom Security**			**Check Count: 1**	**Total: 3,443.37**
54110	307	Communication	05/04/2022	1010273428	Century Link/Business Services	56.79
54110	307	Communication	05/04/2022	1010273476	Verizon Wireless	1,915.98
54110	307	Communication	05/12/2022	1010273479	AT&T	236.38
54110	307	Communication	05/19/2022	1010273689	Verizon Wireless	1,810.10
54110	320	Dues And Memberships	05/04/2022	1010273447	HomeTrust Bank	109.75
54110	336	Maintenance And Repair Services - Equipment	05/04/2022	1010273441	Joshua David Garrison	1,419.00
54110	338	Maintenance And Repair Services - Vehicles	05/04/2022	1010273432	Kenny Drinnon	597.61
54110	338	Maintenance And Repair Services - Vehicles	05/04/2022	1010273475	Valvoline, Inc.	247.14
54110	338	Maintenance And Repair Services - Vehicles	05/12/2022	1010273494	Farris Jeep Ram Chrysler Dodge	83.75
54110	338	Maintenance And Repair Services - Vehicles	05/19/2022	1010273682	Synergy Auto Wash	17.86
54110	338	Maintenance And Repair Services - Vehicles	05/26/2022	1010273719	Ultimate Shine 3 Minute Express Car Wash	560.00
54110	348	Postal Charges	05/04/2022	1010273436	Federal Express	43.92
54110	348	Postal Charges	05/12/2022	1010273495	Federal Express	28.65
54110	348	Postal Charges	05/19/2022	1010273663	Federal Express	27.42
54110	348	Postal Charges	05/26/2022	1010273697	Federal Express	13.71
54110	351	Rentals	05/12/2022	1010273483	Canon Solutions America, Inc	80.57
54110	351	Rentals	05/12/2022	1010273522	T.E.G. Enterprises, Inc	65.00
54110	353	Towing Services	05/04/2022	1010273467	Ronald Tipton	55.00
54110	355	Travel	05/04/2022	1010273447	HomeTrust Bank	1,267.20
54110	355	Travel	05/04/2022	1010273462	George Sauceman	276.50
54110	399	Other Contracted Services	05/04/2022	1010273471	Transunion Risk & Alternative	75.00
54110	399	Other Contracted Services	05/19/2022	1010273675	Murrell Burglar Alarm Co Inc	29.00
54110	425	Gasoline	05/04/2022	1010273437	Fuelman	14,228.44
54110	431	Law Enforcement Supplies	05/04/2022	1010273447	HomeTrust Bank	976.48
54110	431	Law Enforcement Supplies	05/12/2022	1010273518	Safariland LLC	471.00

Return to Committee Cover

ACCT	OB	Name	Date	Check Nbr	Description	Amount Paid
Fund: General Fund #(101)						
54110	431	Law Enforcement Supplies	05/26/2022	1010273713	Sirchie Finger Print Labs	198.55
54110	433	Lubricants	05/04/2022	1010273475	Valvoline, Inc.	209.07
54110	435	Office Supplies	05/04/2022	1010273447	HomeTrust Bank	1,513.93
54110	435	Office Supplies	05/19/2022	1010273673	Morristown Signs, Inc	48.00
54110	450	Tires And Tubes	05/12/2022	1010273478	Airport Tire	30.00
54110	451	Uniforms	05/04/2022	1010273465	Summit Uniform Solutions, Inc.	288.49
54110	451	Uniforms	05/12/2022	1010273529	TruBlu Tactical Police Supply	411.92
54110	524	In Service/Staff Development	05/19/2022	1010273684	TN Sheriffs' Association, Inc	100.00
54110	599	Other Charges	05/12/2022	1010273493	English Mountain Spring Water	7.00
54110	599	Other Charges	05/19/2022	1010273656	Cherokee Boat Dock LLC	100.00
54110	599	Other Charges	05/19/2022	1010273664	First Impressions Design Group, Inc.	999.00
54110	599	Other Charges	05/19/2022	1010273666	Hamblen County Clerk	6.50
54110		**Sheriff's Department**			**Check Count: 33** **Total:**	**28,604.71**
54160	435	Office Supplies	05/04/2022	1010273447	HomeTrust Bank	80.40
54160		**Administration Of The Sexual Offender**			**Check Count: 1** **Total:**	**80.40**
54210	335	Maintenance And Repair Service - Buildings	05/04/2022	1010273429	City Electric Supply	63.10
54210	335	Maintenance And Repair Service - Buildings	05/04/2022	1010273456	Panther Steel Co	3,330.00
54210	335	Maintenance And Repair Service - Buildings	05/04/2022	1010273477	Wholesale Supply Group	22.04
54210	335	Maintenance And Repair Service - Buildings	05/12/2022	1010273525	TMS - Marlin	1,601.96
54210	335	Maintenance And Repair Service - Buildings	05/19/2022	1010273645	American Detention	4,250.00
54210	335	Maintenance And Repair Service - Buildings	05/19/2022	1010273671	Lowe's	105.30
54210	335	Maintenance And Repair Service - Buildings	05/26/2022	1010273705	Holston Gases	41.98
54210	335	Maintenance And Repair Service - Buildings	05/26/2022	1010273711	Relief Septic Repair & Service Inc.	900.00
54210	336	Maintenance And Repair Services - Equipment	05/04/2022	1010273459	REM Company Inc.	421.28
54210	336	Maintenance And Repair Services - Equipment	05/19/2022	1010273681	Starr Equipment Company Inc	879.46
54210	340	Medical And Dental Services	05/04/2022	1010273445	High Risk Obstetrical Consultants, PLLC	409.05

Return to Committee Cover

ACCT	OB	Name	Date	Check Nbr	Description	Amount Paid
Fund: General Fund #(101)						
54210	340	Medical And Dental Services	05/04/2022	1010273450	Knoxville HMA Physician Management LLC	16.10
54210	340	Medical And Dental Services	05/12/2022	1010273520	Southern Health Partners	53,716.90
54210	340	Medical And Dental Services	05/12/2022	1010273532	Vista Radiology	310.20
54210	340	Medical And Dental Services	05/19/2022	1010273646	American Esoteric Laboratories	709.00
54210	340	Medical And Dental Services	05/19/2022	1010273662	East TN Center for Orthopaedic Excellence	360.16
54210	340	Medical And Dental Services	05/19/2022	1010273668	Lakeway Regional Anesthesia Services PLLC	351.00
54210	340	Medical And Dental Services	05/19/2022	1010273686	University Anesthesiologists	1,650.00
54210	340	Medical And Dental Services	05/19/2022	1010273687	University Radiology	185.25
54210	340	Medical And Dental Services	05/26/2022	1010273695	Covenant Medical Group, Inc.	3,098.40
54210	351	Rentals	05/12/2022	1010273522	T.E.G. Enterprises, Inc	170.00
54210	410	Custodial Supplies	05/04/2022	1010273449	Kelsan Inc	4,222.53
54210	410	Custodial Supplies	05/04/2022	1010273458	Quality Waste	253.80
54210	410	Custodial Supplies	05/12/2022	1010273486	Chem Clean Systems LLC	1,885.77
54210	410	Custodial Supplies	05/19/2022	1010273655	Chem Clean Systems LLC	1,641.81
54210	422	Food Supplies	05/04/2022	1010273472	Trinity Services Group, Inc.	20,820.92
54210	422	Food Supplies	05/19/2022	1010273659	Crest Foodservice Equipment Co	1,943.73
54210	435	Office Supplies	05/04/2022	1010273431	County Record Services, LLC	2,597.08
54210	451	Uniforms	05/04/2022	1010273448	Andrew Hunley	100.00
54210	451	Uniforms	05/04/2022	1010273451	Teresa Laws	100.00
54210	451	Uniforms	05/04/2022	1010273465	Summit Uniform Solutions, Inc.	422.15
54210	451	Uniforms	05/19/2022	1010273683	Christian J Taylor	100.00
54210	451	Uniforms	05/26/2022	1010273698	Christina Marie Foster	100.00
54210	599	Other Charges	05/12/2022	1010273483	Canon Solutions America, Inc	97.14
54210	599	Other Charges	05/19/2022	1010273678	Shred-It	28.00
54210	710	Food Service Equipment	05/12/2022	1010273490	Crest Foodservice Equipment Co	284.34
54210	716	Law Enforcement Equipment	05/19/2022	1010273654	Cartwright Communication Inc	696.96

Return to Committee Cover

ACCT	OB	Name	Date	Check Nbr	Description	Amount Paid
Fund: General Fund #(101)						
54210		**Jail**			**Check Count: 37 Total:**	**107,885.41**
54250	307	Communication	05/04/2022	1010273428	Century Link/Business Services	7.21
54250	307	Communication	05/04/2022	1010273476	Verizon Wireless	83.00
54250	399	Other Contracted Services	05/12/2022	1010273531	Uptrust, Inc.	450.00
54250	399	Other Contracted Services	05/19/2022	1010273669	Lynda Marie Lawson	330.00
54250	425	Gasoline	05/04/2022	1010273438	Fuelman	305.02
54250		**Work Release Program**			**Check Count: 5 Total:**	**1,175.23**
54410	338	Maintenance And Repair Services - Vehicles	05/12/2022	1010273517	Roger Yount's Body Shop	1,871.47
54410	425	Gasoline	05/04/2022	1010273438	Fuelman	368.51
54410	435	Office Supplies	05/04/2022	1010273447	HomeTrust Bank	427.99
54410	451	Uniforms	05/04/2022	1010273447	HomeTrust Bank	44.99
54410	599	Other Charges	05/04/2022	1010273447	HomeTrust Bank	164.98
54410	599	Other Charges	05/04/2022	1010273476	Verizon Wireless	34.00
54410		**Civil Defense**			**Check Count: 4 Total:**	**2,911.94**
54490	316	Contributions	05/04/2022	1010273443	Hamblen County E.C.D. / 911	48,000.25
54490		**Other Emergency Management**			**Check Count: 1 Total:**	**48,000.25**
54610	307	Communication	05/04/2022	1010273476	Verizon Wireless	170.00
54610	312	Contracts With Private Agencies	05/12/2022	1010273502	Knox County Medical Examiner	3,700.00
54610	312	Contracts With Private Agencies	05/12/2022	1010273504	Teresa A. Kreceman	425.00
54610	312	Contracts With Private Agencies	05/12/2022	1010273511	National Medical Services, Inc.	251.00
54610	399	Other Contracted Services	05/12/2022	1010273491	Eddie Davis	750.00
54610	399	Other Contracted Services	05/12/2022	1010273497	Todd E Giles	360.00
54610	399	Other Contracted Services	05/12/2022	1010273499	Jeffrey E. Holt	200.00
54610	399	Other Contracted Services	05/12/2022	1010273515	Jimmy W Peoples	760.00

Return to Committee Cover

ACCT	OB	Name	Date	Check Nbr	Description	Amount Paid
Fund: General Fund #(101)						
54610	399	Other Contracted Services	05/12/2022	1010273523	Claude Thompson JR	80.00
54610	399	Other Contracted Services	05/12/2022	1010273524	Tom C Thompson MD	2,208.33
54610		**County Coroner/Medical Examiner**			**Check Count: 10 Total:**	**8,904.33**
55110	309	Contracts With Government Agencies	05/04/2022	1010273428	Century Link/Business Services	52.35
55110	309	Contracts With Government Agencies	05/04/2022	1010273468	TMA Services, LLC	1,500.00
55110	309	Contracts With Government Agencies	05/12/2022	1010273479	AT&T	86.57
55110	309	Contracts With Government Agencies	05/12/2022	1010273483	Canon Solutions America, Inc	17.43
55110	309	Contracts With Government Agencies	05/12/2022	1010273487	Citizen Tribune	434.50
55110	309	Contracts With Government Agencies	05/12/2022	1010273492	English Mountain Coffee	70.00
55110	309	Contracts With Government Agencies	05/19/2022	1010273649	Atmos Energy	95.39
55110	309	Contracts With Government Agencies	05/19/2022	1010273676	MUS Fibernet	12.00
55110	309	Contracts With Government Agencies	05/26/2022	1010273720	Walmart Community BRC	368.08
55110	355	Travel	05/04/2022	1010273452	Myra G Miller	60.26
55110	355	Travel	05/04/2022	1010273464	Kim Smith	63.18
55110	499	Other Supplies And Materials	05/19/2022	1010273651	BK Graphics	2,981.90
55110		**Local Health Center**			**Check Count: 12 Total:**	**5,741.66**
55120	307	Communication	05/04/2022	1010273476	Verizon Wireless	158.95
55120	312	Contracts With Private Agencies	05/26/2022	1010273707	Morristown-Hamblen Humane Soc	20,000.00
55120	338	Maintenance And Repair Services - Vehicles	05/26/2022	1010273719	Ultimate Shine 3 Minute Express Car Wash	30.00
55120	425	Gasoline	05/04/2022	1010273438	Fuelman	672.39
55120	435	Office Supplies	05/04/2022	1010273425	Acme Printing Company, Inc	86.00
55120	450	Tires And Tubes	05/04/2022	1010273457	Porter's Tire Store	737.40
55120	499	Other Supplies And Materials	05/04/2022	1010273447	HomeTrust Bank	77.99
55120		**Rabies And Animal Control**			**Check Count: 7 Total:**	**21,762.73**
55390	316	Contributions	05/26/2022	1010273715	State Of Tn-Dept Of Health	115,233.00

Return to Committee Cover

ACCT	OB	Name	Date	Check Nbr	Description	Amount Paid
Fund: General Fund #(101)						
55390		**Appropriation To State**			**Check Count: 1 Total:**	**115,233.00**
55710	309	Contracts With Government Agencies	05/12/2022	1010273500	Keep M'town Hamblen Beautiful	5,263.26
55710	309	Contracts With Government Agencies	05/26/2022	1010273702	Hamblen County-Morristown Solid Waste	8,996.80
55710		**Sanitation Management**			**Check Count: 2 Total:**	**14,260.06**
55900	309	Contracts With Government Agencies	05/04/2022	1010273444	Hamblen County-Morristown Solid Waste	19,010.41
55900		**Other Public Health And Welfare**			**Check Count: 1 Total:**	**19,010.41**
56700	307	Communication	05/04/2022	1010273476	Verizon Wireless	49.96
56700	307	Communication	05/12/2022	1010273509	MUS Fibernet	134.22
56700	336	Maintenance And Repair Services - Equipment	05/04/2022	1010273457	Porter's Tire Store	44.99
56700	336	Maintenance And Repair Services - Equipment	05/12/2022	1010273505	Lane Sales Power Equipment	383.59
56700	336	Maintenance And Repair Services - Equipment	05/19/2022	1010273671	Lowe's	44.25
56700	410	Custodial Supplies	05/04/2022	1010273458	Quality Waste	253.80
56700	410	Custodial Supplies	05/12/2022	1010273480	Big M Janitorial	384.40
56700	410	Custodial Supplies	05/19/2022	1010273650	Big M Janitorial	99.00
56700	412	Diesel Fuel	05/19/2022	1010273690	Voyager Fleet Systems Inc	307.52
56700	415	Electricity	05/19/2022	1010273647	Appalachian Electric Co-Op	23.13
56700	415	Electricity	05/19/2022	1010273674	Morristown Utilities	3,455.00
56700	425	Gasoline	05/19/2022	1010273690	Voyager Fleet Systems Inc	491.57
56700	454	Water And Sewer	05/19/2022	1010273674	Morristown Utilities	1,887.00
56700	599	Other Charges	05/04/2022	1010273447	HomeTrust Bank	87.79
56700	599	Other Charges	05/12/2022	1010273493	English Mountain Spring Water	29.50
56700	791	Other Construction	05/12/2022	1010273516	ProTeam Auction Co LLC	1,100.00
56700	791	Other Construction	05/12/2022	1010273521	Steamers Express	906.00
56700		**Parks And Fair Boards**			**Check Count: 15 Total:**	**9,681.72**

Return to Committee Cover

ACCT	OB	Name	Date	Check Nbr	Description	Amount Paid
Fund: General Fund #(101)						
57100	307	Communication	05/04/2022	1010273428	Century Link/Business Services	4.96
57100	355	Travel	05/19/2022	1010273670	Debra Long	80.73
57100		**Agricultural Extension Service**			**Check Count: 2 Total:**	**85.69**
57800	399	Other Contracted Services	05/04/2022	1010273473	Robert Tucker	49.99
57800	429	Instructional Supplies And Materials	05/04/2022	1010273425	Acme Printing Company, Inc	97.50
57800	429	Instructional Supplies And Materials	05/04/2022	1010273447	HomeTrust Bank	437.92
57800	429	Instructional Supplies And Materials	05/26/2022	1010273720	Walmart Community BRC	49.70
57800		**Storm Water Management**			**Check Count: 4 Total:**	**635.11**
58110	399	Other Contracted Services	05/04/2022	1010273469	TN Dept of Commerce & Insurance	50.00
58110		**Tourism**			**Check Count: 1 Total:**	**50.00**
58300	307	Communication	05/04/2022	1010273428	Century Link/Business Services	1.55
58300		**Veterans' Services**			**Check Count: 1 Total:**	**1.55**
58600	210	Unemployment Compensation	05/04/2022	1010273470	TN Dept Of Labor & Workforce Development	660.64
58600	299	Other Fringe Benefits	05/26/2022	1010273701	Hamblen Co Dept Of Education	137.50
58600	312	Contracts With Private Agencies	05/19/2022	1010273667	Healthstar Physicians, Inc	28.00
58600		**Employee Benefits**			**Check Count: 3 Total:**	**826.14**
91130	709	Data Processing Equipment	05/04/2022	1010273433	Eagle Advantage Solutions, Inc.	19,259.00
91130	791	Other Construction	05/04/2022	1010273455	NEO Corporation	4,700.00
91130		**Public Safety Projects**			**Check Count: 2 Total:**	**23,959.00**
99100	316	Contributions	05/04/2022	1010273439	Fund 116	320,000.00

Return to Committee Cover

ACCT	OB	Name	Date	Check Nbr	Description			Amount Paid
Fund: General Fund #(101)								
99100	316	Contributions	05/04/2022	1010273440	Fund 131			61,864.00
99100		**Transfers Out**				**Check Count:**	**2**	**Total: 381,864.00**
							General Fund #(101) Total:	**928,518.39**

Return to Committee Cover

COMMISSION APPROVAL LISTING

Date/Time: 6/6/2022 1:53:05 PM

ACCT	OB	Name	Date	Check Nbr	Description	Amount Paid
Fund:	**Solid**	**Waste/Sanitation Fund #(116)**				
55710	299	Other Fringe Benefits	05/26/2022	1160024660	Hamblen Co Dept Of Education	37.50
55710	302	Advertising	05/12/2022	1160024644	Citizen Tribune	425.76
55710	336	Maintenance And Repair Services - Equipment	05/12/2022	1160024645	Clarke Power Services, Inc	3,236.51
55710	336	Maintenance And Repair Services - Equipment	05/12/2022	1160024650	Stringfellow	1,178.30
55710	336	Maintenance And Repair Services - Equipment	05/12/2022	1160024651	Turner Industrial Supply, Inc.	57.23
55710	336	Maintenance And Repair Services - Equipment	05/19/2022	1160024653	Combs Equipment Group LLC	8,455.00
55710	336	Maintenance And Repair Services - Equipment	05/19/2022	1160024655	NAPA Auto Parts Of Morristown	3,801.32
55710	336	Maintenance And Repair Services - Equipment	05/19/2022	1160024656	Precision Cutting & Hydraulics, LLC	2,490.00
55710	336	Maintenance And Repair Services - Equipment	05/19/2022	1160024658	Worldwide Equipment, Inc.	4,148.27
55710	336	Maintenance And Repair Services - Equipment	05/26/2022	1160024662	Precision Cutting & Hydraulics, LLC	675.00
55710	336	Maintenance And Repair Services - Equipment	05/26/2022	1160024663	Southern Fluidpower, Inc.	95.42
55710	359	Disposal Fees	05/19/2022	1160024654	Hamblen County-Morristown Solid Waste	79,670.40
55710	359	Disposal Fees	05/26/2022	1160024661	Hamblen County-Morristown Solid Waste	231.80
55710	412	Diesel Fuel	05/12/2022	1160024646	Fuelman	20,187.94
55710	425	Gasoline	05/12/2022	1160024646	Fuelman	928.28
55710	450	Tires And Tubes	05/12/2022	1160024647	Goforth Tire & Auto, Inc	641.40
55710	451	Uniforms	05/12/2022	1160024643	Cintas Corp., Loc. 207	620.68
55710	499	Other Supplies And Materials	05/04/2022	1160024641	UniFirst First Aid Corp	124.49
55710	499	Other Supplies And Materials	05/12/2022	1160024643	Cintas Corp., Loc. 207	105.59
55710	499	Other Supplies And Materials	05/19/2022	1160024652	Big M Janitorial	648.00
55710	499	Other Supplies And Materials	05/26/2022	1160024659	East Tennessee Plumbing	250.00
55710	712	Heating and Air Conditioning Equipment	05/12/2022	1160024648	Jason Mathis	949.47
55710	733	Solid Waste Equipment	05/26/2022	1160024662	Precision Cutting & Hydraulics, LLC	405.00
55710		**Sanitation Management**			**Check Count: 20** **Total:**	**129,363.36**
					Solid Waste/Sanitation Fund #(116) Total:	**129,363.36**

Return to Committee Cover

COMMISSION APPROVAL LISTING

Date/Time: 6/6/2022 1:53:53 PM

ACCT	OB	Name	Date	Check Nbr	Description	Amount Paid
Fund: Highway/Public Works Fund (#131)						
61000	302	Advertising	05/12/2022	1313044033	Citizen Tribune	302.90
61000	307	Communication	05/04/2022	1313044027	Verizon Wireless	114.05
61000	307	Communication	05/12/2022	1313044029	AT&T	85.98
61000	415	Electricity	05/19/2022	1313044049	Holston Electric Cooperative	669.68
61000	454	Water and Sewer	05/26/2022	1313044056	Morristown Utilities	109.00
61000	599	Other Charges	05/04/2022	1313044026	HomeTrust Bank	12.39
61000	599	Other Charges	05/12/2022	1313044032	Cintas Corp., Loc. 207	146.99
61000	599	Other Charges	05/12/2022	1313044034	Comer Electric Company Inc	3,415.16
61000	599	Other Charges	05/12/2022	1313044035	Elliott Boots	109.99
61000	599	Other Charges	05/12/2022	1313044044	Smoky Mountain Farmers Co-Op	507.97
61000	599	Other Charges	05/19/2022	1313044051	Lowe's	91.52
61000	599	Other Charges	05/26/2022	1313044054	Elliott Boots	100.00
61000		**Administration**			**Check Count: 12** **Total:**	**5,665.63**
62000	312	Contracts With Private Agencies	05/26/2022	1313044058	James Larry Rose	1,500.00
62000	351	Rentals	05/26/2022	1313044059	The Lilly Company	4,182.85
62000	404	Asphalt - Hot Mix	05/12/2022	1313044030	Blalock & Sons Inc	11,039.05
62000	404	Asphalt - Hot Mix	05/12/2022	1313044041	Newport Paving & Ready Mix	12,562.40
62000	408	Concrete	05/12/2022	1313044028	Apac Atlantic, Inc	1,134.00
62000	409	Crushed Stone	05/12/2022	1313044047	Vulcan Materials Company	9,790.05
62000	451	Uniforms	05/12/2022	1313044032	Cintas Corp., Loc. 207	594.24
62000		**Highway And Bridge Maintenance**			**Check Count: 7** **Total:**	**40,802.59**
63100	412	Diesel Fuel	05/12/2022	1313044036	Fuelman	5,072.81
63100	412	Diesel Fuel	05/12/2022	1313044042	Pioneer Petroleum	3,166.17
63100	416	Equipment Parts - Heavy	05/12/2022	1313044038	Knoxville Rubber & Gasket Co., Inc.	752.69
63100	416	Equipment Parts - Heavy	05/12/2022	1313044039	NAPA Auto Parts Of Morristown	610.61
63100	416	Equipment Parts - Heavy	05/12/2022	1313044043	Power Equipment Company	3,750.00

Return to Committee Cover

EXPENSE SUMMARY REPORT

May 2021-2022

HAMBLEN COUNTY ACCOUNTS & BUDGETS

116 Sanitation

Fund(s) Selected:
116

Account Group	Budget Amount	Budget Amendments	Amended Budget	MTD Expenses	YTD Expenses	Outstanding Encumbrances	Unencumbered Balance	% Bdgt Remain
55710 Sanitation Management	3,090,233.00	234,607.50	3,324,840.50	221,323.54	2,285,072.18	333,594.49	706,173.83	21.24%
Solid Waste/Sanitation Fund #(116)	3,090,233.00	234,607.50	3,324,840.50	221,323.54	2,285,072.18	333,594.49	706,173.83	21.24%

Return to Committee Cover

EXPENSE SUMMARY REPORT

May 2021-2022

HAMBLEN COUNTY ACCOUNTS & BUDGETS

131 Highway

Fund(s) Selected:
131

Account Group	Budget Amount	Budget Amendments	Amended Budget	MTD Expenses	YTD Expenses	Outstanding Encumbrances	Unencumbered Balance	% Bdgt Remain
61000 Administration	449,355.00	960.00	450,315.00	28,501.83	381,288.20	4,769.47	64,257.33	14.27%
62000 Highway And Bridge Maintenance	1,729,368.00	66,100.00	1,795,468.00	147,335.29	1,339,695.24	49,832.55	405,940.21	22.61%
63100 Operation And Maintenance Of Equipment	420,984.00	61,940.00	482,924.00	33,423.70	310,880.11	43,096.26	128,947.63	26.70%
66000 Employee Benefits	24,725.00	0.00	24,725.00	0.00	14,678.50	0.00	10,046.50	40.63%
68000 Capital Outlay	1,018,000.00	0.00	1,018,000.00	18,108.25	514,319.55	335,857.03	167,823.42	16.49%
Highway/Public Works Fund (#131)	3,642,432.00	129,000.00	3,771,432.00	227,369.07	2,560,861.60	433,555.31	777,015.09	20.60%

Return to Committee Cover

June 10, 2022

Bill Brittain
Hamblen County Mayor
511 West Second North Street
Morristown, TN 37814

Re: Proposed Purchase of GFL Property

Dear Mr. Brittain:

Currently, the landfill operated by the Hamblen County-Morristown Solid Waste (HCMSW) Board at 3849 Sublett Road, Morristown, Tennessee has approximately twelve months of remaining life. The HCMSW Board has submitted an application to the State of Tennessee Department of Environment and Conservation (TDEC) for approval to expand two proposed phases which will provide an additional ten years of estimated life.

The HCMSW Board has also become aware of two adjacent properties owned by GFL which are available for sale as follows:

a) A 16± acre tract which borders the northeast corner of the HCMSW landfill;
b) A 55± acre Class 3 landfill that GFL operates east of the HCMSW landfill.

Based on engineering estimates, the 16± acre tract, once developed, could add an estimated twenty-one years of useful life. The Class 3 landfill would allow the diversion of demolition and other approved waste thereby lengthening the life of the landfill currently open and in use. Additionally, purchasing the Class 3 landfill from GFL would allow easier access to and expansion into an existing 55-acre tract already owned by the HCMSW landfill.

At its regular monthly meeting held on May 20, 2022, the HCMSW Board approved authorizing Hamblen County and the City of Morristown to pursue purchasing these properties subject to certain contingencies being met. Accordingly, it is requested that the governing bodies of Hamblen County and the City of Morristown approve and purchase these properties which will significantly extend the life of the landfill.

Respectfully submitted,

Thomas D. Rush

Tom Rush
Board Chair

3849 Sublett Road • Morristown, Tennessee 37813 • Phone: (423) 581-8784 • Fax: (423) 581-5301
Return to Committee Cover

MOSELEYARCHITECTS

Change Order

Hamblen County Justice Center

Change Order Number: 03

Project # 590418

To Contractor:

Blaine Construction Corporation
6510 Deane Hill Drive
Knoxville, TN 37919

Change Order Date: 05/11/2022

Contract Date: 10/18/2021

The Contract is hereby revised by the following items:

PCO	Description	Days	Amount
012	Response to RFI-048 drop outs Level 1 basement	0	$1,802.00
015	Sped 221316 Sanitary Waste and Vent Piping Revision	0	$0.00
016	RFI-065 OH DOOR KL001	0	($958.00)
018	Unsuitables	0	$17,255.68
	Total for this Change Order:	**0 Days**	**$18,099.68**

The original Contract Sum was	$92,208,500.48
Sum of changes by prior Change Orders	$117,689.00
The Contract Sum prior to this Change Order was	$92,326,189.48
The Contract Sum will be changed by this Change Order in the amount of	$18,099.68
The new Contract Sum including this Change Order will be	**$92,344,289.16**
The Contract duration will be changed by	0 Days
The revised Substantial Completion date as of this Change Order is	2/7/2024

ARCHITECT	CONTRACTOR	OWNER
Moseley Architects	Blaine Construction Corporation	Hamblen County
6210 Ardrey Kell Rd, Suite 425 Charlotte, NC 28277	6510 Deane Hill Drive Knoxville, TN 37919	511 W. 2nd North St. Morristown, TN 37814
SIGNATURE DocuSigned by: Linda Briggs ECDD1DD89EC04AD...	SIGNATURE	SIGNATURE
DATE 5/11/2022	DATE	DATE

MOSELEYARCHITECTS
6210 Ardrey Kell Road, The Hub at Waverly, Suite 425 • Charlotte, NC 28277
(704) 540-3755

Potential Change Order No. 012 Scope of Work

Project Name	Arch Project No.	Date
Hamblen County Justice Center	**590418**	**4/1/2022**
Subject	Specification No.	Drawing No.
Response to RFI-048 drop outs Level 1 basement	**NA**	**NA**

Attention	Created By
Blaine Prine, Blaine Construction Corporation	**Linda Briggs**

This is not a change order nor a directive to proceed with the work described herein. Please submit with the form below an itemized material cost and time proposal for the changes in the contract sum and contract time for the following proposed modification(s) to the contract:

Description: Please refer to attached correspondence related to remedial work required at dropouts discovered on the Level 1 basement.
As per review in field it was determined that the drop out located by the smaller yellow star on attached mark-up from contractor as part of RFI-048 (north west corner) was located near a storm line. The soft soil was removed to expose the underlying rock. Water was used to flush the seams or throat and flowable fill was used to backfill the excavated areas. Photos are attached.

The second drop out - if another drop out doesn't occur in the area, contractor can proofroll it at a later time and see if there is a need to excavate/repair it then. Right no remediation required.

Receipt of your proposal is requested by: April 15, 2022

Proposal

In response to the request above, the Contractor proposes to perform the changes described for an increase / decrease in the contract sum in the amount of $ 1,802.00 and increase / decrease in the contract time of 0 calendar days.

A detailed breakdown of labor and material costs is attached hereto which includes all costs and time associated with the proposed change(s).

Signed: Blaine Prine Date: 4-19-22

Encl.: As Stated

Cc w/encl.:

Linda Briggs
Construction Services Division

Return to Committee Cover

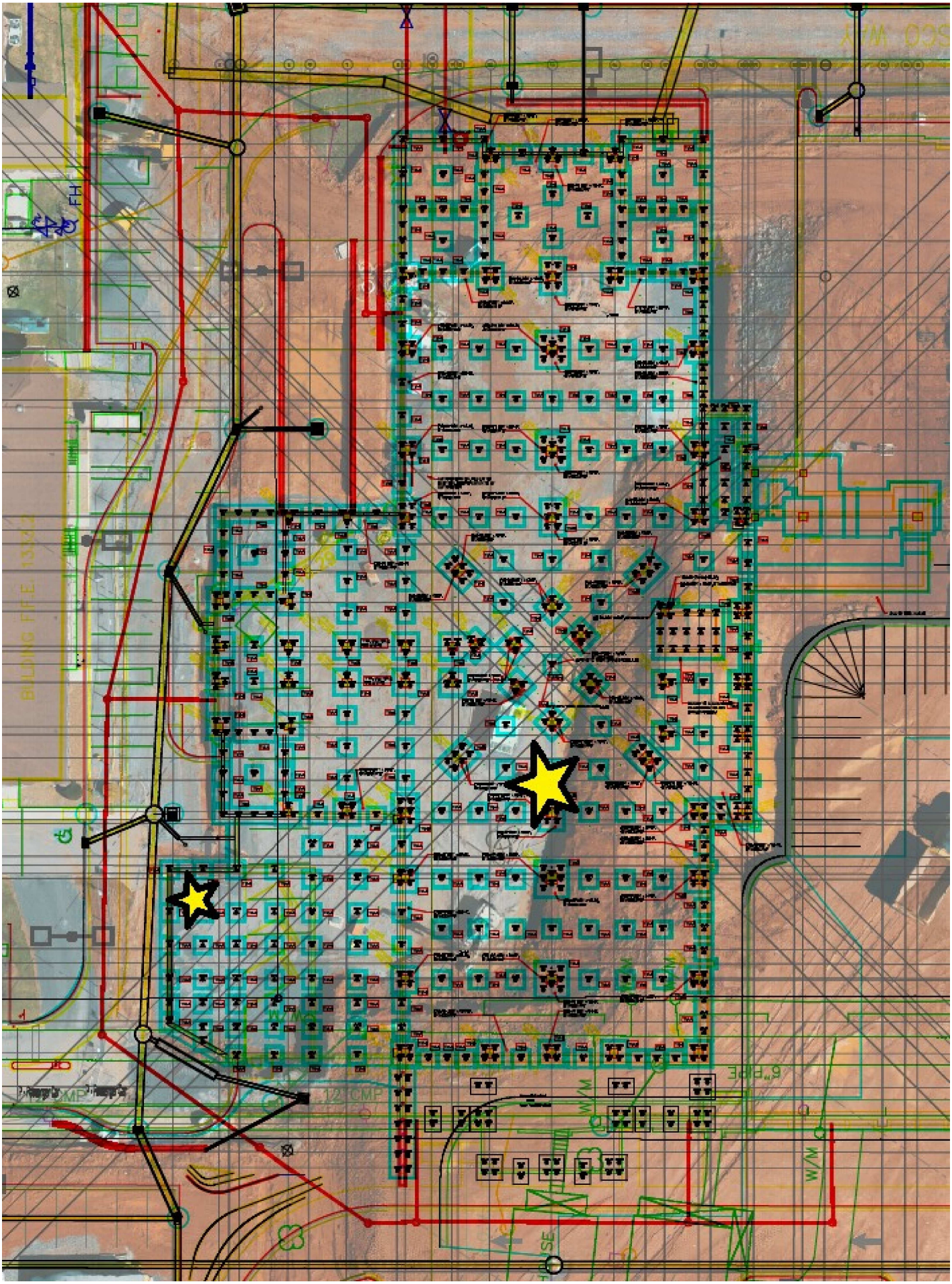

Return to Committee Cover

Briggs, Linda

From: Adam Hicks <ahicks@geoservicesllc.com>
Sent: Tuesday, March 29, 2022 11:07 PM
To: Tayler Day
Subject: RE: RFI: RFI-048 - Dropouts in Level 0 basement - Hamblen County Justice Center - RFI:048:Wdvwf
Attachments: IMG_8490.jpg; IMG_8491.jpg; IMG_8492.jpg; IMG_8494.jpg

Tayler,

The drop out located by the smaller yellow star (north west corner) was located near a storm line. The soft soil was removed to exposed the underlying rock. Water was used to flush the seams or throat and flowable fill was used to backfill the excavated areas. Photos are attached.

As for the larger one near the middle of the basement. Not much has been done to that one. Blaine and I decided to leave it alone (since March 15). Redstone has been washing out their grout lines in it. We put some of the left overflowable fill in it from the above repair. But last time I was there (on Monday). It was holding water in spots and Blaine had backfilled it with onsite soil.

I spoke to Blaine and told them if another drop out doesn't occur in the area, we can proofroll it at a later time and see if there is a need to excavate/repair it then.

Adam Hicks, P.E.
Project Manager
GEOServices, LLC, Geotechnical and Materials Engineers
GEOServices, LLC
2561 Willow Point Way
Knoxville, Tennessee 37931
(865) 803-6021 cell
(865) 539-8242 office
email: ahicks@geoservicesllc.com

From: Tayler Day <tday@geoservicesllc.com>
Sent: Tuesday, March 29, 2022 7:37 AM
To: Adam Hicks <ahicks@geoservicesllc.com>
Subject: Fwd: RFI: RFI-048 - Dropouts in Level 0 basement - Hamblen County Justice Center - RFI:048:Wdvwf

Adam,

Can you tell me briefly how these were remediated so I can close the RFI on the dropouts? Thanks.

-Tayler

TAYLER J. DAY, P.E.*
Senior Engineer
GEOServices, LLC
6607 Mountain View Rd

Return to Committee Cover

Suite 139
Ooltewah, TN 37363
(423) 614-6471 OFFICE
(423) 614-6479 FAX
(217) 371-2185 DIRECT
EMAIL: tday@geoservicesllc.com
*licensed Civil Engineer in AR, CA, IA, KS, KY, MO, NC, NE, TN, TX, UT

Begin forwarded message:

From: "Briggs, Linda" <lbriggs@moseleyarchitects.com>
Date: March 29, 2022 at 7:19:25 AM EDT
To: Tayler Day <tday@geoservicesllc.com>
Subject: RFI: RFI-048 - Dropouts in Level 0 basement - Hamblen County Justice Center - RFI:048:Wdvwf

Taylor,

Please advise in writing if direction was provided to the contractor and is so what it was so I can close this RFI officially.

Thanks, Linda

Project: 590418 **Hamblen County Justice Center**

Notification about RFI **RFI-048 - Dropouts in Level 0 basement**

Question

There are two documented dropouts in the Level 0 basement area of the project. Owner, Architech, CM and geotech have all been notified a couple of times over the past two week. Please see attached for location of each (noted with yellow stars) and photo of the larger of the two. Per geotechnical, these will have to be remediated. Please advise.

Select the RFI on Newforma Info Exchange

RFI Info

ID: **048**

Notification generated by Newforma® Project Center

Return to Committee Cover

Return to Committee Cover

Return to Committee Cover

Return to Committee Cover

Return to Committee Cover

BLAINE CONSTRUCTION CORPORATION
Pending Change Order (PCO) Breakdown Form

ADD CHANGE REQUEST

HAMBLEN COUNTY JUSTICE CENTER
MORRISTOWN, TN

BCC Job No.	85164
Moseley Job No.	590418
DATE:	4/19/2022
REVISION:	0

PCO- **-012 - COSTS TO REMEDIATE ONE DROPOUT IN THE BASEMENT AREA**

Quoted By: BLAINE PRINE

SUMMARY OF WORK:

THIS PCO REFLECTS THE COSTS TO REMEDIATE ONE (THE SMALLER ONE) OF THE TWO DROPOUTS THAT WERE OBSERVED IN THE BASEMENT AREA OF THE PROJECT.

ITEM	DESCRIPTION	QTY	UNIT	LABOR U.P.	LABOR TOTAL	EQUIPMENT/MATERIAL U.P.	EQUIPMENT/MATERIAL TOTAL	SUBCONTR. TOTAL	TOTAL
				-	-	-	-	-	-
A	SUBCONTRACTOR COSTS - SEE ATTACHED PRICING AND DETAIL SHEETS FROM EAST TENNESSEE TURF AND LANDSCAPING. THIS REFLECTS COSTS TO PURCHASE, CONVEY AND PLACE 10 CUYDS OF FLOWABLE FILL, PER GEOTECHNICAL (GEOS) RECOMMENDATION AND CONCURRENCE.	1.0	LSUM	-	-	-	-	**1,698.56**	**1,698.56**
NOTES:									

1. THIS CHANGE ORDER REFLECTS THE COSTS TO REMEDIATE ONLY THE ONE, SMALLER DROPOUT LOCATED IN THE NORTHWEST PORTION OF THE BASEMENT AREA, AND IT DOES NOT INCLUDE ANY COSTS TO MAINTAIN OR REMEDIATE ANY OTHER BASEMENT DROPOUTS.

2. N/A

					-		-	-	-
SUB-TOTALS ALL WORK					**-**		**-**	**1,698.56**	**1,698.56**
	Material Tax & Equipment Surcharge						-		-
	Labor Burden @ 40% Labor Totals				-				-
	OH & Profit @ 15% BCC Totals				-		-		-
	OH & Profit Subs @ 5%:							84.93	85
	Builders Risk Insurance @ 0.2%								3
	Payment & Performance Bonds @ 0.85%								15

TOTAL COST **$ 1,802**

Return to Committee Cover

989 Simpson Road • Whitesburg, TN 37891
PH (423) 273-1189 nroverbay@hotmail.com

April 18th, 2022

Hamblen County Justice Center
Fall-Out Flow-Fill under Storm Drainage Pipe
Morristown, Tennessee

Description	*Qty.*	*Unit*	*Unit Price*	*Total Price*
Summers Taylor Flow Fill	1	LS	$1,152.38	$1,152.38
Superintendent	1	HR	$100.00	$ 100.00
Operator	1	HR	$50.00	$ 50.00
Laborer	4	HR	$40.00	$160.00
Profit	10%	LS	$1,462.38	$146.24
Overhead	5%	LS	$1,462.38	$73.12
Bond Cost	1%	LS	$1,681.74	$16.82
Total				**$1,698.56**

Return to Committee Cover

SUMMERS-TAYLOR MATERIALS CO.

600 Sevier Street
Johnson City, TN 37604
Phone: (423) 543-3181

INVOICE
312293

Bill To: EAST TENNESSEE TURF & LAND SER
989 SIMPSON ROAD
WHITESBURG, TN 37891

Ship To: WEST 3RD NORTH ST / JACKSON ST
HAMBLEN COUNTY JAIL
MORRISTOWN, TN

Date: 3/18/2022 Customer 106244 PO: HAMBLEN C Invoice: 312293

Job Name: MORRISTOWN MISC 2022/2023

Material	Qty	UM	Unit Price	Matl Total	Total
Flowable Fill (Commercial)	10.00	CU Yar	105.00	1,050.00	1,050.00

Tickets: 76028314

Invoice Subtotal	1,050.00
Invoice Tax	102.38
Invoice Total	$1,152.38

ALL PAST DUE ACCOUNTS WILL BE CHARGED A 1.5% FINANCE CHARGE PER MONTH

Return to Committee Cover

MOSELEYARCHITECTS
6210 Ardrey Kell Road, The Hub at Waverly, Suite 425 • Charlotte, NC 28277
(704) 540-3755

Potential Change Order No. 015 Scope of Work

Project Name	Arch Project No.	Date
Hamblen County Justice Center	**590418**	**4/11/2022**
Subject	Specification No.	Drawing No.
Sped 221316 Sanitary Waste and Vent Piping Revision	**221316**	**NA**

Attention	Created By
Blaine Prine, Blaine Construction Corporation	**Linda Briggs**

This is not a change order nor a directive to proceed with the work described herein. Please submit with the form below an itemized material cost and time proposal for the changes in the contract sum and contract time for the following proposed modification(s) to the contract:

Description:

Please refer to updated Spec Section 221316 Sanitary Waste and Vent Piping -
Piping Application 3.2/E
Above Ground Food Service Soil and Waste Piping
1. Copper DVW pipe and fittings.

Receipt of your proposal is requested by: April 25, 2022

Proposal

In response to the request above, the Contractor proposes to perform the changes described for an increase / decrease in the contract sum in the amount of $ 0.00 and increase / decrease in the contract time of 0 calendar days.

A detailed breakdown of labor and material costs is attached hereto which includes all costs and time associated with the proposed change(s).

Signed: Blaine Prine* Date: 4-19-22

*THIS NO COST PROPOSAL IS A RESULT OF THE CLARIFICATION RESPONSE TO RFI-073

Encl.: As Stated

Cc w/encl.:

Linda Briggs
Construction Services Division

Return to Committee Cover

SECTION 221316 - SANITARY WASTE AND VENT PIPING

PART 1 - GENERAL

1.1 RELATED DOCUMENTS

A. Provisions of the Contract and of the Contract Documents apply to this Section.

1.2 DEFINITIONS

A. EPDM: Ethylene-propylene-diene terpolymer rubber.

B. LLDPE: Linear, low-density polyethylene plastic.

C. NBR: Acrylonitrile-butadiene rubber.

D. PE: Polyethylene plastic.

E. PVC: Polyvinyl chloride plastic.

F. TPE: Thermoplastic elastomer.

1.3 PERFORMANCE REQUIREMENTS

A. Components and installation shall be capable of withstanding a minimum working pressure of 10-foot head of water.

1.4 QUALITY ASSURANCE

A. Piping materials shall bear label, stamp, or other marking of testing agency.

PART 2 - PRODUCTS

2.1 PIPING MATERIALS

A. Refer to Part 3 "Piping Applications" Article for applications of pipe, tube, fitting, and joining materials.

2.2 HUB-AND-SPIGOT, CAST-IRON SOIL PIPE AND FITTINGS

A. All cast iron soil pipe and fittings shall be marked with the Collective Trademark of the Cast Iron Soil Pipe Institute.

B. Pipe and Fittings: ASTM A 74, Service and Extra-Heavy class(es).

C. Gaskets: ASTM C 564, rubber.

2.3 HUBLESS CAST-IRON SOIL PIPE AND FITTINGS

A. All cast iron soil pipe and fittings shall be marked with the Collective Trademark of the Cast Iron Soil Pipe Institute.

B. Pipe and Fittings: ASTM A 888 or CISPI 301.

C. Shielded Couplings: ASTM C 1277 assembly of metal shield or housing, corrosion-resistant fasteners, and rubber sleeve with integral, center pipe stop.

1. Heavy-Duty, Shielded, Stainless-Steel Couplings: With stainless-steel shield, stainless-steel bands and tightening devices, and ASTM C 564, rubber sleeve.

a. Manufacturers:

1) ANACO-Husky.
2) Clamp-All Corp.
3) Mission Rubber Co.

2.4 STEEL PIPE AND FITTINGS

A. Pressure-Seal-Joint-End, ASTM A312, Type 304/304L, Schedule 5S Stainless Steel Pipe: NPS 2 and smaller; full finished annealed pipe, certified for use with press couplings and fittings.

1. Pressure-Seal-Joint Piping Systems:

a. Manufacturers:
1) Victaulic Co. of America.
2) Viega; Plumbing and Heating Systems

b. Pressure-Seal-Joint-End Fittings: UL-listed, ASTM A 403, WPW, WPW/S9, or CR/S9, or shall be fabricated from cold drawn stainless steel type A304/304L, with EPDM-rubber O-ring seal in each end.

B. Grooved-End, ASTM A312, Type 304/304L or 316/316L, Schedule 10 Stainless Steel Pipe: Schedule 10 in NPS 2 1/2 and larger; with factory- or field-formed, roll-grooved ends.

1. Grooved-Joint Piping Systems:

a. Manufacturers:
1) Victaulic Co. of America.
2) Ward Manufacturing.

b. Grooved-End Fittings: UL-listed, ASTM A 403, WPW, WPW/S9, or CR/S9, or shall be fabricated from stainless steel pipe conforming to ASTM A312, with

factory grooved ends. Fittings shall be type 304/304L or 316/316L stainless steel casting with OD matching steel-pipe OD.

c. Grooved-End-Pipe Couplings: UL-Listed, ASTM A 351, A 743 and A 744, rigid pattern, unless otherwise indicated; gasketed fitting matching stainless steel-pipe OD. Include stainless steel housing with keys matching stainless steel-pipe and fitting grooves, pressure responsive synthetic gasket , ASTM D 2000 listed for use with housing, and stainless steel bolts and nuts.

2.5 COPPER TUBE AND FITTINGS

A. Copper DWV Tube: ASTM B 306, drainage tube, drawn temper.

1. Copper Drainage Fittings: ASME B16.23, cast copper or ASME B16.29, wrought copper, solder-joint fittings.

B. Hard Copper Tube: ASTM B 88, Types L and M, water tube, drawn temper.

1. Copper Pressure-Seal-Joint Fittings:

a. Manufacturers: Subject to compliance with requirements, available manufacturers offering products that may be incorporated into the Work include, but are not limited to, the following:

1) Elkhart Products Corporation; Industrial Division.
2) NIBCO INC.
3) Viega; Plumbing and Heating Systems.

b. NPS 2 and Smaller: Wrought-copper fitting with EPDM-rubber O-ring seal in each end.

c. NPS 2-1/2 to NPS 4: Cast-bronze or wrought-copper fitting with EPDM-rubber O-ring seal in each end.

2. Copper Pressure Fittings: ASME B16.18, cast-copper-alloy or ASME B16.22, wrought-copper, solder-joint fittings. Furnish wrought-copper fittings if indicated.
3. Copper Flanges: ASME B16.24, Class 150, cast copper with solder-joint end.
4. Copper Unions: MSS SP-123, copper-alloy, hexagonal-stock body with ball-and-socket, metal-to-metal seating surfaces, and solder-joint or threaded ends.

2.6 PVC PIPE AND FITTINGS

A. Solid-Wall PVC Pipe: ASTM D 2665, drain, waste, and vent.

1. PVC Socket Fittings: ASTM D 2665, socket type, made to ASTM D 3311, drain, waste, and vent patterns.

B. Solvent Cement and Adhesive Primer:

1. Use PVC solvent cement that has a VOC content of 510 g/L or less when calculated according to 40 CFR 59, Subpart D (EPA Method 24).

2. Use adhesive primer that has a VOC content of 550 g/L or less when calculated according to 40 CFR 59, Subpart D (EPA Method 24).

PART 3 - EXECUTION

3.1 EXCAVATION

A. Refer to Division 31 Section "Earth Moving" for excavating, trenching, and backfilling.

3.2 PIPING APPLICATIONS

A. Flanges and unions may be used on aboveground pressure piping, unless otherwise indicated.

B. Aboveground, soil and waste piping shall be the following:
1. Hub-less cast-iron soil piping with heavy duty couplings.

C. Aboveground, vent piping shall be the following:
1. Hub-less cast-iron soil piping with heavy duty couplings.

D. Underground, Soil, Waste, and Vent Piping:Kitchen Waste: Extra Heavy Hub and Spigot cast-iron soil piping.
2. Other than kitchen waste: PVC pipe and fittings.

E. Aboveground, Food Service Equipment Soil and Waste Piping: (*PCO-015)
1. Copper DWV pipe and fittings.

3.3 PIPING INSTALLATION

A. Basic piping installation requirements are specified in Division 22 Section "Common Work Results for Plumbing."

B. Install cleanouts at grade and extend to where building sanitary drains connect to building sanitary sewers.

C. Install cast-iron sleeve with water stop and mechanical sleeve seal at each service pipe penetration through foundation wall. Select number of interlocking rubber links required to make installation watertight. Sleeves and mechanical sleeve seals are specified in Division 22 Section "Common Work Results for Plumbing."

D. Install cast-iron soil piping according to CISPI's "Cast Iron Soil Pipe and Fittings Handbook," Chapter IV, "Installation of Cast Iron Soil Pipe and Fittings."

1. Install encasement on underground piping according to ASTM A 674 or AWWA C105.

E. Make changes in direction for soil and waste drainage and vent piping using appropriate branches, bends, and long-sweep bends. Sanitary tees and short-sweep 1/4 bends may be used on vertical stacks if change in direction of flow is from horizontal to vertical. Use long-turn, double Y-branch and 1/8-bend fittings if 2 fixtures are installed back to back or side by side

with common drain pipe. Straight tees, elbows, and crosses may be used on vent lines. Do not change direction of flow more than 90 degrees. Use proper size of standard increasers and reducers if pipes of different sizes are connected. Reducing size of drainage piping in direction of flow is prohibited.

F. Lay buried building drainage piping beginning at low point of each system. Install true to grades and alignment indicated, with unbroken continuity of invert. Place hub ends of piping upstream. Install required gaskets according to manufacturer's written instructions for use of lubricants, cements, and other installation requirements. Maintain swab in piping and pull past each joint as completed.

G. Install soil and waste drainage and vent piping at the following minimum slopes, unless otherwise indicated:

1. Building Sanitary Drain: 2 percent downward in direction of flow for piping NPS 3 and smaller; 1 percent downward in direction of flow for piping NPS 4 and larger.
2. Building Vacuum Waste Piping: 2 percent downward in direction of flow.
3. Horizontal Sanitary Drainage Piping: 2 percent downward in direction of flow for piping NPS 2-1/2 and smaller; 1 percent downward in direction of flow for piping NPS 3 and larger.
4. Vent Piping: 1 percent down toward vertical fixture vent or toward vent stack.

H. Install PVC soil and waste drainage and vent piping according to ASTM D 2665.

I. Install underground PVC soil and waste drainage piping according to ASTM D 2321.

J. Sleeves are not required for cast-iron soil piping passing through concrete slabs-on-grade if slab is without membrane waterproofing.

K. Install underground PVC soil and waste drainage piping according to ASTM D 2321.

L. Do not enclose, cover, or put piping into operation until it is inspected and approved by authorities having jurisdiction.

3.4 JOINT CONSTRUCTION

A. Basic piping joint construction requirements are specified in Division 22 Section "Common Work Results for Plumbing."

B. Join hub-and-spigot, cast-iron soil piping with gasket joints according to CISPI's "Cast Iron Soil Pipe and Fittings Handbook" for compression joints.

C. Join hubless cast-iron soil piping according to CISPI 310 and CISPI's "Cast Iron Soil Pipe and Fittings Handbook" for hubless-coupling joints.

D. Grooved Joints: Assemble joint with keyed coupling, gasket, lubricant, and bolts according to coupling and fitting manufacturer's written instructions.

E. PVC Nonpressure Piping Joints: Join piping according to ASTM D 2665.

3.5 HANGER AND SUPPORT INSTALLATION

A. Pipe hangers and supports are specified in Division 22 Section "Hangers and Supports for Plumbing Piping and Equipment." Install the following:

1. Vertical Piping: MSS Type 8 or Type 42, clamps.
2. Install individual, straight, horizontal piping runs according to the following:

   a. 100 Feet and Less: MSS Type 1, adjustable, steel clevis hangers.
   b. Longer Than 100 Feet: MSS Type 43, adjustable roller hangers.
   c. Longer Than 100 Feet, if Indicated: MSS Type 49, spring cushion rolls.

3. Multiple, Straight, Horizontal Piping Runs 100 Feet or Longer: MSS Type 44, pipe rolls. Support pipe rolls on trapeze.
4. Base of Vertical Piping: MSS Type 52, spring hangers.

B. Install supports according to Division 22 Section "Hangers and Supports for Plumbing Piping and Equipment."

C. Support vertical piping and tubing at base and at each floor.

D. Rod diameter may be reduced 1 size for double-rod hangers, with 3/8-inch minimum rods.

E. Install hangers for cast-iron soil piping with the following maximum horizontal spacing and minimum rod diameters:

1. NPS 1-1/2 and NPS 2: 60 inches with 3/8-inch rod.
2. NPS 3: 60 inches with 1/2-inch rod.
3. NPS 4 and NPS 5: 60 inches with 5/8-inch rod.
4. NPS 6: 60 inches with 3/4-inch rod.
5. NPS 8 to NPS 12: 60 inches with 7/8-inch rod.

F. Install supports for vertical cast-iron soil piping every 15 feet.

G. Install hangers for copper tubing with the following maximum horizontal spacing and minimum rod diameters:

1. NPS 1-1/4: 72 inches with 3/8-inch rod.
2. NPS 1-1/2 and NPS 2: 96 inches with 3/8-inch rod.
3. NPS 2-1/2: 108 inches with 1/2-inch rod.
4. NPS 3 to NPS 5: 10 feet with 1/2-inch rod.
5. NPS 6: 10 feet with 5/8-inch rod.
6. NPS 8: 10 feet with 3/4-inch rod.

H. Install supports for vertical copper tubing every 10 feet.

I. Install hangers for PVC piping with the following maximum horizontal spacing and minimum rod diameters:

1. NPS 1-1/2 and NPS 2: 48 inches with 3/8-inch rod.
2. NPS 3: 48 inches with 1/2-inch rod.

3. NPS 4 and 5: 48 inches with 5/8-inch rod.
4. NPS 6: 48 inches with 3/4-inch rod.
5. NPS 8 to NPS 12: 48 inches with 7/8-inch rod.

J. Install supports for vertical PVC piping every 48 inches.

K. Support piping and tubing not listed above according to MSS SP-69 and manufacturer's written instructions.

3.6 CONNECTIONS

A. Drawings indicate general arrangement of piping, fittings, and specialties.

B. Connect soil and waste piping to exterior sanitary sewerage piping. Use transition fitting to join dissimilar piping materials.

C. Connect drainage and vent piping to the following:

1. Plumbing Fixtures: Connect drainage piping in sizes indicated, but not smaller than required by plumbing code.
2. Plumbing Fixtures and Equipment: Connect atmospheric vent piping in sizes indicated, but not smaller than required by authorities having jurisdiction.
3. Plumbing Specialties: Connect drainage and vent piping in sizes indicated, but not smaller than required by plumbing code.
4. Equipment: Connect drainage piping as indicated. Use flanges instead of unions for connections NPS 2-1/2 and larger.

3.7 FIELD QUALITY CONTROL

A. During installation, notify authorities having jurisdiction at least 24 hours before inspection must be made. Perform tests specified below in presence of authorities having jurisdiction.

1. Roughing-in Inspection: Arrange for inspection of piping before concealing or closing-in after roughing-in and before setting fixtures.
2. Final Inspection: Arrange for final inspection by authorities having jurisdiction to observe tests specified below and to ensure compliance with requirements.

B. Reinspection: If authorities having jurisdiction find that piping will not pass test or inspection, make required corrections and arrange for reinspection.

C. Reports: Prepare inspection reports and have them signed by authorities having jurisdiction.

D. Test sanitary drainage and vent piping according to procedures of authorities having jurisdiction or, in absence of published procedures, as follows:

1. Test for leaks and defects in new piping and parts of existing piping that have been altered, extended, or repaired. If testing is performed in segments, submit separate report for each test, complete with diagram of portion of piping tested.

2. Leave uncovered and unconcealed new, altered, extended, or replaced drainage and vent piping until it has been tested and approved. Expose work that was covered or concealed before it was tested.
3. Roughing-in Plumbing Test Procedure: Test drainage and vent piping, except outside leaders, on completion of roughing-in. Close openings in piping system and fill with water to point of overflow, but not less than 10-foot head of water. From 15 minutes before inspection starts to completion of inspection, water level must not drop. Inspect joints for leaks.
4. Finished Plumbing Test Procedure: After plumbing fixtures have been set and traps filled with water, test connections and prove they are gastight and watertight. Plug vent-stack openings on roof and building drains where they leave building. Introduce air into piping system equal to pressure of 1-inch wg. Use U-tube or manometer inserted in trap of water closet to measure this pressure. Air pressure must remain constant without introducing additional air throughout period of inspection. Inspect plumbing fixture connections for gas and water leaks.
5. Repair leaks and defects with new materials and retest piping, or portion thereof, until satisfactory results are obtained.
6. Prepare reports for tests and required corrective action.

3.8 CLEANING

A. Clean interior of piping. Remove dirt and debris as work progresses.

B. Protect drains during remainder of construction period to avoid clogging with dirt and debris and to prevent damage from traffic and construction work.

C. Place plugs in ends of uncompleted piping at end of day and when work stops.

3.9 PROTECTION

A. Exposed PVC Piping: Protect plumbing vents exposed to sunlight with two coats of water-based latex paint.

END OF SECTION 221316

MOSELEYARCHITECTS
6210 Ardrey Kell Road, The Hub at Waverly, Suite 425 • Charlotte, NC 28277
(704) 540-3755

Potential Change Order No. 016 Scope of Work

Project Name	Arch Project No.	Date
Hamblen County Justice Center	**590418**	**4/11/2022**
Subject	Specification No.	Drawing No.
RFI-065 OH DOOR KL001	**083323**	**NA**

Attention	Created By
Blaine Prine, Blaine Construction Corporation	**Linda Briggs**

This is not a change order nor a directive to proceed with the work described herein. Please submit with the form below an itemized material cost and time proposal for the changes in the contract sum and contract time for the following proposed modification(s) to the contract:

Description:

Please refer to updated Spec section 083323, 2.3.A.14 which has been revised to make the overhead door KL001 a manual operated door in lieu of Electrical.

Receipt of your proposal is requested by: April 25, 2022

Proposal

In response to the request above, the Contractor proposes to perform the changes described for an ~~increase~~ / decrease in the contract sum in the amount of $ < $958.00 > and increase / decrease in the contract time of 0 calendar days.

A detailed breakdown of labor and material costs is attached hereto which includes all costs and time associated with the proposed change(s).

Signed: Blaine Prine Date: 4-20-22

Encl.: As Stated

Cc w/encl.:

Linda Briggs
Construction Services Division

Return to Committee Cover

SECTION 083323 - OVERHEAD COILING DOORS (*PCO-016)

PART 1 - GENERAL

1.1 RELATED DOCUMENTS

A. Provisions of the Contract and of the Contract Documents apply to this Section.

1.2 ACTION SUBMITTALS

A. Product Data: For each type and size of overhead coiling door and accessory.
   1. Include construction details, material descriptions, dimensions of individual components, profiles for slats, and finishes. Include data for weatherstripping, astragals, and gaskets. Include data for door position switches.
   2. Include rated capacities, operating characteristics, electrical characteristics, and furnished accessories.

B. Shop Drawings: For each installation and for special components not dimensioned or detailed in manufacturer`s product data.
   1. Include plans, elevations, sections, and mounting details.
   2. Include details of equipment assemblies, and indicate dimensions, required clearances, method of field assembly, components, and location and size of each field connection.
   3. Include points of attachment and their corresponding static and dynamic loads imposed on structure.
   4. For exterior components, include details of provisions for assembly expansion and contraction and for excluding and draining moisture to the exterior.
   5. Show locations of controls, locking devices, and other accessories.
   6. Include diagrams for power, signal, door position switches, and control wiring.

C. Samples for Initial Selection: Manufacturer`s finish charts showing full range of colors and textures available for units with factory-applied finishes.
   1. Include similar Samples of accessories involving color selection.

D. Samples for Verification: For each type of exposed finish on the following components, in manufacturer`s standard sizes:
   1. Curtain slats.

1.3 INFORMATIONAL SUBMITTALS

A. Qualification Data: For Installer.

B. Security System Component Certification: Provide certification from Security Control Systems Contractor (SCSC, Division 28) that door position switch device and mounting are acceptable.

C. Sample Warranty: For special warranty.

1.4 CLOSEOUT SUBMITTALS

A. Maintenance Data: For overhead coiling doors to include in maintenance manuals.

1.5 QUALITY ASSURANCE

A. Installer Qualifications: An entity that employs installers and supervisors who are trained and approved by manufacturer for both installation and maintenance of units required for this Project.
   1. Maintenance Proximity: Not more than two hours` normal travel time from Installer`s place of business to Project site.

B. Fire-Rated Door Assemblies: Complying with NFPA 80; listed and labeled by qualified testing agency, for fire-protection ratings indicated, based on testing at as close to neutral pressure as possible according to NFPA 252 or UL 10B.

C. Regulatory Requirements: Comply with applicable provisions in the U.S. Architectural & Transportation Barriers Compliance Board's ADA-ABA Accessibility Guidelines and ICC A117.1.

1.6 WARRANTY

A. Special Warranty: Manufacturer agrees to repair or replace components of doors that fail in materials or workmanship within specified warranty period.
   1. Warranty Period: Two years from date of Substantial Completion.

PART 2 - PRODUCTS

2.1 MANUFACTURERS

A. Source Limitations: Obtain overhead coiling doors through one source from a single manufacturer.
   1. Obtain operators and controls from overhead coiling-door manufacturer.

2.2 PERFORMANCE REQUIREMENTS

A. Structural Performance, Exterior Doors: Exterior overhead coiling doors shall withstand the wind loads, the effects of gravity loads, and loads and stresses within limits and under conditions indicated according to SEI/ASCE 7 and as follows:
   1. Design Wind Load: As indicated on Drawings.
   2. Testing: According to ASTM E 330, or to DASMA 108 for garage doors and complying with acceptance criteria of DASMA 108.
   3. Deflection Limits: Design overhead coiling doors to withstand design wind load without evidencing permanent deformation or disengagement of door components.
   4. Operability under Wind Load: Design overhead coiling doors to remain operable under design wind load, acting inward and outward.

B. Operation Cycles: Provide overhead coiling door components and operators capable of operating for not less than number of cycles indicated for each door. One operation cycle is complete when a door is opened from the closed position to the fully open position and returned to the closed position.

2.3 DOOR ASSEMBLY

A. Insulated Service Door at Loading Dock:
   1. Overhead coiling door formed with curtain of interlocking metal slats.
   2. Manufacturers: Subject to compliance with requirements, available manufacturers offering products that may be incorporated into the Work include, but are not limited to, the following:
      a. Amarr, Entrematic Group.
      b. C.H.I. Overhead Doors, Inc.
      c. Clopay Building Products.
      d. CornellCookson, Inc.
      e. McKeon Door Company, Inc.
      f. Overhead Door Corporation.
      g. Raynor Garage Doors.
      h. Wayne-Dalton, Overhead Door Corp.

3. Operation Cycles: Door components and operators capable of operating for not less than 50,000 cycles. One operation cycle is complete when a door is opened from the closed position to the fully open position and returned to the closed position.
4. Include tamperproof cycle counter.
5. Air Infiltration: Maximum rate of 1.0 cfm/sq. ft. at 15 and 25 mph when tested according to ASTM E 283 or DASMA 105.
6. Curtain R-Value: 6.0 deg F x h x sq. ft./Btu.
7. Door Curtain Material: Aluminum.
8. Door Curtain Slats: Flat profile slats of manufacturer's standard center-to-center height.
9. Insulated-Slat Interior Facing: Metal.
10. Bottom Bar: Two angles, each not less than 1-1/2- by 1-1/2- by 1/8-inch thick; fabricated from aluminum extrusions and finished to match door.
11. Curtain Jamb Guides: Aluminum with exposed finish matching curtain slats.
12. Hood: Match curtain material and finish.
    a. Shape: Square.
    b. Mounting: Face of wall.
13. Locking Devices: Equip door with locking device assembly.
    a. Locking Device Assembly: Single-jamb side locking bars, operable from inside and outside with cylinders.
14. **Manual Door Operation: Chain-hoist operator; consisting of endless steel hand chain, chain-pocket wheel and guard, and gear-reduction unit with a maximum 25-lbf force for door operation. Provide alloy-steel hand chain with chain holder secured to operator guide. (*PCO-016)**
15. ~~**Electric Door Operator:**~~ **(*PCO-016)**
    a. ~~**Usage Classification: Standard duty, 25 or more cycles per hour and up to 90 cycles per day.**~~ **(*PCO-016)**
    b. ~~**Operator Location: Wall mounted, or as indicated.**~~ **(*PCO-016)**
    c. ~~**Safety: Listed according to UL 325 by a qualified testing agency for commercial or industrial use.**~~ **(*PCO-016)**
    d. ~~**Motor Exposure: Interior.**~~ **(*PCO-016)**
16. ~~**Emergency Manual Operation: Chain type.**~~ **(*PCO-016)**
17. ~~**Obstruction-Detection Device: Automatic electric sensor edge on bottom bar.**~~ **(*PCO-016)**
    a. ~~**Sensor Edge Bulb Color: Black.**~~ **(*PCO-016)**
18. ~~**Control Station(s): Interior and exterior mounted, with remote operation from existing control room.**~~ **(*PCO-016)**
19. Curtain Accessories: Equip door with weatherseals ~~**and push/pull handles**~~. **(*PCO-016)**
20. Door Finish:
    a. Aluminum Finish: Dark Bronze anodized.
    b. Factory Prime Finish: Manufacturer`s standard color.
    c. Interior Curtain-Slat Facing: Match finish of exterior curtain-slat face.

B. **Service Doors at Vehicle Sallyport**: Overhead coiling door formed with curtain of interlocking metal slats.
1. Manufacturers: Subject to compliance with requirements, [provide products by the following] [provide products by one of the following] available manufacturers offering products that may be incorporated into the Work include, but are not limited to, the following:
    a. ACME Rolling Doors.
    b. Alpine Overhead Doors, Inc.
    c. Alumatec Pacific Products.
    d. Amarr; Entrematic Group.

e. ASTA Door Corporation.
f. C.H.I. Overhead Doors, Inc.
g. City-Gates.
h. Clopay Building Products.
i. CornellCookson, Inc.
j. Dynamic Closures.
k. Lawrence Roll-Up Doors, Inc.
l. McKeon Rolling Steel Door Company, Inc.
m. Metro Door.
n. Overhead Door Corporation.
o. Raynor Garage Doors.
p. Southwestern Rolling Steel Door Co.
q. Wayne-Dalton Corp, a division of Overhead Door Corp.

2. Operation Cycles: Door components and operators capable of operating for not less than 100,000. One operation cycle is complete when a door is opened from the closed position to the fully open position and returned to the closed position.
   a. Include tamperproof cycle counter.
3. Door Curtain Material: Aluminum.
4. Door Curtain Slats: Flat profile slats of manufacturer's standard center-to-center height.
   a. Perforated Slats: Approximately 1/16-inch pinholes.
5. Bottom Bar: Two angles, each not less than 1-1/2 by 1-1/2 by 1/8-inch-thick; fabricated from aluminum extrusions and finished to match door.
6. Curtain Jamb Guides: Aluminum with exposed finish matching curtain slats.
7. Hood: Match curtain material and finish.
   a. Shape: Round.
   b. Mounting: Face of wall.
8. Locking Devices: Equip door with locking device assembly.
   a. Locking Device Assembly: Single-jamb side locking bars, operable from inside and outside with cylinders.
9. Electric Door Operator:
   a. Usage Classification: Standard duty, up to 25 cycles per hour and up to 90 cycles per day.
   b. Operator Location: Wall mounted or as indicated.
   c. Safety: Listed according to UL 325 by a qualified testing agency for commercial or industrial use.
   d. Motor Exposure: Interior.
   e. Emergency Manual Operation: Chain type.
   f. Obstruction-Detection Device: Automatic electric sensor edge on bottom bar.
      1) Sensor Edge Bulb Color: Black.
   g. Control Station(s): Interior and exterior mounted, with remote operation from existing control room.
10. Curtain Accessories: Equip door with weatherseals and push/pull handles.
11. Door Finish:
   a. Aluminum Finish: Dark Bronze anodized.

2.4 MATERIALS, GENERAL

A. Electrical Components, Devices, and Accessories: Listed and labeled as defined in NFPA 70, by a qualified testing agency, and marked for intended location and application.

2.5 DOOR CURTAIN MATERIALS AND CONSTRUCTION

A. Door Curtains: Fabricate overhead coiling-door curtain of interlocking metal slats, designed to withstand wind loading indicated, in a continuous length for width of door without splices.

Unless otherwise indicated, provide slats of thickness and mechanical properties recommended by door manufacturer for performance, size, and type of door indicated, and as follows:

1. Aluminum Door Curtain Slats: ASTM B 209 sheet or ASTM B 221 extrusions, alloy and temper standard with manufacturer for type of use and finish indicated; thickness of 0.050 inch; and as required.
2. Insulation: Fill slats for insulated doors with manufacturer`s standard thermal insulation complying with maximum flame-spread and smoke-developed indexes of 75 and 450, respectively, according to ASTM E 84 or UL 723. Enclose insulation completely within slat faces.
3. Metal Interior Curtain-Slat Facing: Match metal of exterior curtain-slat face, with minimum aluminum thickness of 0.032 inch (0.80 mm).

B. Curtain Jamb Guides: Manufacturer`s standard angles or channels and angles of same material and finish as curtain slats unless otherwise indicated, with sufficient depth and strength to retain curtain, to allow curtain to operate smoothly, and to withstand loading. Slot bolt holes for guide adjustment. Provide removable stops on guides to prevent overtravel of curtain, and a continuous bar for holding windlocks.

1. Coordinate curtain jamb conditions & angle requirements with the work of Division 28 Security sections, and Security Control Systems Contractor (SCSC) for security door position switch and interlocking requirements indicated on "SE" Series Drawings.

2.6 HOODS

A. General: Form sheet metal hood to entirely enclose coiled curtain and operating mechanism at opening head. Contour to fit end brackets to which hood is attached. Roll and reinforce top and bottom edges for stiffness. Form closed ends for surface-mounted hoods and fascia for any portion of between-jamb mounting that projects beyond wall face. Equip hood with intermediate support brackets as required to prevent sagging.

1. Aluminum: 0.040-inch-thick aluminum sheet complying with ASTM B 209, of alloy and temper recommended by manufacturer and finisher for type of use and finish indicated.

2.7 LOCKING DEVICES

A. Locking Device Assembly: Fabricate with cylinder lock, spring-loaded dead bolt, operating handle, cam plate, and adjustable locking bars to engage through slots in tracks.

1. Lock Cylinders: As specified in Division 08 Section "Door Hardware" and keyed to building keying system.

B. Chain Lock Keeper: Suitable for padlock.

C. Safety Interlock Switch: Equip power-operated doors with safety interlock switch to disengage power supply when door is locked.

2.8 CURTAIN ACCESSORIES

A. Weatherseals for Exterior Doors: Equip each exterior door with weather-stripping gaskets fitted to entire exterior perimeter of door for a weather-resistant installation unless otherwise indicated.

1. At door head, use 1/8-inch-thick, replaceable, continuous-sheet baffle secured to inside of hood or field-installed on the header.
2. At door jambs, use replaceable, adjustable, continuous, flexible, 1/8-inch-thick seals of flexible vinyl, rubber, or neoprene.

3. At door bottom bar, use replaceable, adjustable, continuous, compressible gasket of extruded flexible rubber or neoprene as a durable gasket seal.

B. Overhead Door Magnetic Position Switch: Surface-mounted door position switch with switch contacts housed in a sealed case. Fasten with security screws. Coordinate mounting location and wiring requirements with Security Control Systems Contractor (SCSC), per Division 28 Security sections.

1. Products: Subject to compliance with requirements, products that may be incorporated into the Work include, but are not limited to, the following:
   a. Interlogix, a unit of United Technologies Corporation; "2200 Series" Overhead Door Magnetic Contacts.
   b. Schlage, an Allegion Company; "674-OH" Overhead Door Status Switch.
   c. Securitron, Hanchett Entry Systems, Inc., an Assa Abloy Company; "MSS-1" Maximum Security Switch.

2.9 COUNTERBALANCE MECHANISM

A. General: Counterbalance doors by means of manufacturer`s standard mechanism with an adjustable-tension, steel helical torsion spring mounted around a steel shaft and contained in a spring barrel connected to top of curtain with barrel rings. Use grease-sealed bearings or self-lubricating graphite bearings for rotating members.

B. Counterbalance Barrel: Fabricate spring barrel of manufacturer`s standard hot-formed, structural-quality, seamless carbon-steel pipe, of sufficient diameter and wall thickness to support rolled-up curtain without distortion of slats and to limit barrel deflection to not more than 0.03 in./ft. of span under full load.

C. Counterbalance Spring: One or more oil-tempered, heat-treated steel helical torsion springs. Size springs to counterbalance weight of curtain, with uniform adjustment accessible from outside barrel. Secure ends of springs to barrel and shaft with cast-steel barrel plugs.

D. Torsion Rod for Counterbalance Shaft: Fabricate of manufacturer`s standard cold-rolled steel, sized to hold fixed spring ends and carry torsional load.

E. Brackets: Manufacturer`s standard mounting brackets of either cast iron or cold-rolled steel plate.

2.10 ELECTRIC DOOR OPERATORS

A. General: Electric door operator assembly of size and capacity recommended and provided by door manufacturer for door and operation-cycles requirement specified, with electric motor and factory-prewired motor controls, starter, gear-reduction unit, solenoid-operated brake, clutch, control stations, control devices, integral gearing for locking door, and accessories required for proper operation.

1. Basis-of-Design Product: Subject to compliance with requirements, provide Cornell/Cookson "SG" Operator or comparable product by, or approved by, coiling door manufacturer.
2. Comply with NFPA 70.
3. Control equipment complying with NEMA ICS 1, NEMA ICS 2, and NEMA ICS 6, with NFPA 70 Class 2 control circuit, maximum 24-V ac or dc.

B. Usage Classification: Electric operator and components capable of operating for not less than number of cycles per hour indicated for each door.

C. Door Operator Location(s): Operator location indicated for each door.

1. Wall Mounted: Operator is mounted to the inside front wall on the left or right side of door and connected to door drive shaft with drive chain and sprockets. Side room is required for this type of mounting. Wall-mounted operator can also be mounted above or below shaft; if above shaft, headroom is required.

D. Motors: Reversible-type motor with controller (disconnect switch) for motor exposure indicated for each door assembly.
1. Electrical Characteristics:
   a. Phase: Single phase.
   b. Volts: 115V
   c. Hertz: 60.
2. Motor Size: 1/2 HP, unless noted otherwise
3. Operating Controls, Controllers, Disconnect Switches, Wiring Devices, and Wiring: Manufacturer`s standard unless otherwise indicated.
4. Coordinate wiring requirements and electrical characteristics of motors and other electrical devices with building electrical system and each location where installed.

E. Limit Switches: Equip each motorized door with adjustable switches interlocked with motor controls and set to automatically stop door at fully opened and fully closed positions.

F. Obstruction-Detection Devices: External entrapment protection consisting of indicated automatic safety sensor capable of protecting full width of door opening. For non-fire-rated doors, activation of device immediately stops and reverses downward door travel.
1. Pneumatic Sensor Edge: Automatic safety sensor edge, located within astragal or weather stripping mounted to bottom bar. Contact with sensor activates device.

G. Control Station: Three-button control station in fixed location with momentary-contact push-button controls labeled "Open" and "Stop" and sustained- or constant-pressure push-button control labeled "Close."
1. Interior-Mounted Units: Full-guarded, surface-mounted, heavy-duty type, with general-purpose NEMA ICS 6, Type 1 enclosure.
2. Exterior-Mounted Units: Full-guarded, standard-duty, surface-mounted, weatherproof type, NEMA ICS 6, Type 4 enclosure, key operated.

H. Emergency Manual Operation: Equip each electrically powered door with capability for emergency manual operation. Design manual mechanism so required force for door operation does not exceed 25 lbf.

I. Emergency Operation Disconnect Device: Equip operator with hand-operated disconnect mechanism for automatically engaging manual operator and releasing brake for emergency manual operation while disconnecting motor without affecting timing of limit switch. Mount mechanism so it is accessible from floor level. Include interlock device to automatically prevent motor from operating when emergency operator is engaged.
1. Provide for chain to be padlocked to a secure, permanent wall loop when not in use. Provide 1/2-inch eyelet with expansion anchor mounted to masonry or welded to structural steel section, or an alternate acceptable device as work of this section. Coordinate with Owner.

J. Motor Removal: Design operator so motor may be removed without disturbing limit-switch adjustment and without affecting emergency manual operation.

2.11 GENERAL FINISH REQUIREMENTS

A. Comply with NAAMM/NOMMA 500 for recommendations for applying and designating finishes.

B. Appearance of Finished Work: Noticeable variations in same piece are not acceptable. Variations in appearance of adjoining components are acceptable if they are within the range of approved Samples and are assembled or installed to minimize contrast.

2.12 ALUMINUM FINISHES

A. Dark Bronze Anodic Finish: AAMA 611, AA-M12C22A41, Class I, 0.018 mm or thicker.

PART 3 - EXECUTION

3.1 EXAMINATION

A. Examine substrates areas and conditions, with Installer present, for compliance with requirements for substrate construction and other conditions affecting performance of the Work.

B. Examine locations of electrical connections.

C. Proceed with installation only after unsatisfactory conditions have been corrected.

3.2 INSTALLATION

A. Install overhead coiling doors and operating equipment complete with necessary hardware, anchors, inserts, hangers, and equipment supports; according to manufacturer`s written instructions and as specified.

B. Install overhead coiling doors, hoods, controls, and operators at the mounting locations indicated for each door.

C. Accessibility: Install overhead coiling doors, switches, and controls along accessible routes in compliance with the accessibility standard.

D. Power-Operated Doors: Install according to UL 325.

3.3 STARTUP SERVICE

A. Engage a factory-authorized service representative to perform startup service.
   1. Complete installation and startup checks according to manufacturer`s written instructions.
   2. Test and adjust controls and safety devices. Replace damaged and malfunctioning controls and equipment.

3.4 ADJUSTING

A. Adjust hardware and moving parts to function smoothly so that doors operate easily, free of warp, twist, or distortion.
   1. Adjust exterior doors and components to be weather resistant.

B. Lubricate bearings and sliding parts as recommended by manufacturer.

C. Adjust seals to provide tight fit around entire perimeter.

3.5 MAINTENANCE SERVICE

A. Initial Maintenance Service: Beginning at Substantial Completion, maintenance service shall include 12 months` full maintenance by skilled employees of coiling-door Installer. Include quarterly preventive maintenance, repair or replacement of worn or defective components, lubrication, cleaning, and adjusting as required for proper door operation. Parts and supplies shall be manufacturer`s authorized replacement parts and supplies.

1. Perform maintenance, including emergency callback service, during normal working hours.

3.6 DEMONSTRATION

A. Engage a factory-authorized service representative to train Owner`s maintenance personnel to adjust, operate, and maintain overhead coiling doors.

A. END OF SECTION 083323

BLAINE CONSTRUCTION CORPORATION
Pending Change Order (PCO) Breakdown Form

ADD CHANGE REQUEST

HAMBLEN COUNTY JUSTICE CENTER
MORRISTOWN, TN

BCC Job No.	85164
Moseley Job No.	590418
DATE:	4/20/2022
REVISION:	0

PCO- **-016 - REVISE OH DOCK DOOR KL001 TO BE MANUALLY OPERATED IN LIEU OF ELECTRIC OPERATOR**

Quoted By: BLAINE PRINE

SUMMARY OF WORK:

THIS PCO REFLECTS THE COSTS TO REVISE OVERHEAD DOCK DOOR #KL001 TO BE MANUALLY OPERATED IN LIEU OF ELECTRIC OPERATOR.

ITEM	DESCRIPTION	QTY	UNIT	LABOR U.P.	LABOR TOTAL	EQUIPMENT/MATERIAL U.P.	EQUIPMENT/MATERIAL TOTAL	SUBCONTR. TOTAL	TOTAL
				-	-	-	-	-	-
A	PER PCO-016, REVISE OH DOCK DOOR KL-001 TO BE MANUALLY OPERATION (CHAIN) IN LIEU OF ELECTRIC OPERATOR	1.0	LSUM	-	-	-	-	**(958.00)**	**(958.00)**
NOTES:									

1. N/A

2. N/A

					-		-	-	-
SUB-TOTALS ALL WORK					**-**		**-**	**(958.00)**	**(958.00)**
	Material Tax & Equipment Surcharge						-		-
	Labor Burden @ 40% Labor Totals				-				-
	OH & Profit @ 15% BCC Totals				-		-		-
	OH & Profit Subs @ 5%:							(47.90)	-
	Builders Risk Insurance @ 0.2%								-
	Payment & Performance Bonds @ 0.85%								-

TOTAL COST **$ (958)**

Return to Committee Cover

Overhead Door Company of Knoxville

P.O. Box 154
Knoxville, TN
37901
Telephone (865) 573-1950
Fax (865) 579-4203

715 Sevier Avenue
Knoxville, TN
37920
Telephone (865) 573-1950
Fax (865) 579-4203

The Genuine. The Original.

Proposal #: 1-62112

PROPOSAL SUBMITTED TO: BLAINE CONSTRUCTION			Date 4/20/2022	Attention BLAINE PRINE
STREET P. O. BOX 10147			Job Name HAMBLEN COUNTY JUSTICE CENTER / REVISED	
City KNOXVILLE	State TN	ZipCode 37939	Job Location	
Phone Number 693-8900	Fax Number 693-7894		Job Phone	

FURNISH AND INSTALL:
SECTION 083313 OVERHEAD COILING COUNTER SHUTTERS, & SECTION 083323 OVERHEAD COILING DOORS

ADDENDA 1- 4 ACKNOWLEDGED

DOOR #S
IPOO1C, DM014A STAINLESS STEEL ROLLING FIRE/ SMOKE SHUTTERS.
IPO31A & IPOO31B NON-RATED STAINLESS STEEL SHUTTERS
1P001.1 , IPOO1.2 ALUMINUM DARK BRONZE ANODIZED PERFORATED SERVICE DOOR
KLOO1 ALUMINUM INSULATED ALUMINUM DARK BRONZE ANODIZED

$68,972.00 INSTALLED

CHANG DOOR # KL001 TO CHAIN HOIST IN LIEU OF MOTOR OPERATED DEDUCT ($958.00)

**********DUE TO CURRENT AND ONGOING VOLATILE PRICE INCREASES, THE FOLLOWING IS REQUIRED**********

12% ESCALATION IS INCLUDED IN THE QUOTE ABOVE

Escalation Clause: In the event of significant delay or price increase of material, equipment, or energy occurring during the performance of the contract through no fault of the Contractor, the Contract Sum, time of completion or contract requirements shall be equitably adjusted by Change Order in accordance with the procedures of the Contract Documents. A change in price of material, equipment, or energy will be considered significant when the price of materials, equipment, or energy increases more than three percent (12%) between the date of any Agreement and the date of the applicable Work. The General Contractor shall be required to pay the increased cost incurred without markup.

Note: if doors are put into production prior to the end of year and shipped to a storage space deduct ($5,864.00) from the quoted price. The material would become the responsibility of the Contractor

We hereby propose to complete in accordance with above specification, for the sum of:

Signature _____

NATHAN COX VICE-PRESIDENT Direct Dial: 865-573-1950
865-579-4203 FAX

TERMS AND CONDITIONS

Payment to be made as follows:

Prices subject to change if not accepted in 60 days.

The above price includes installation in openings prepared by others. We do not include any material or labor for erection of wood or steel jambs unless other wise stated. Motor operated doors include installation of door and operator. We do not include installation of push button stations, pull switches, or any type of switches or controls unless specifically stated above. We exclude all wires and wiring. We exclude all paint and painting other than factory applied paint. We include applicable taxes. Seller cannot be held responsible for shipping delays beyond our control. If paying with credit card please add 3% to the total.

ACCEPTANCE: Terms, Price, and specifications on all pages of this proposal are hereby accepted and the work authorized.

Purchaser: _____

Signature	Title	Date of Acceptance

MOSELEYARCHITECTS
6210 Ardrey Kell Road, The Hub at Waverly, Suite 425 • Charlotte, NC 28277
(704) 540-3755

Potential Change Order No. 018 Scope of Work

Project Name	Arch Project No.	Date
Hamblen County Justice Center	**590418**	**4/25/2022**
Subject	Specification No.	Drawing No.
Unsuitable	**NA**	**NA**

Attention	Created By
Blaine Prine, Blaine Construction Corporation	**Linda Briggs**

This is not a change order nor a directive to proceed with the work described herein. Please submit with the form below an itemized material cost and time proposal for the changes in the contract sum and contract time for the following proposed modification(s) to the contract:

Description:

Refer to report dated March 18, 2022 from GEOS regarding area West of Level 1. As indiacted on attached report. It was found to have some unsuitable materials that needed to be remediated. Approximate quantity is 416 Cubic Yards and unit price to be used per contract is $41.48 per cubic yard.

Receipt of your proposal is requested by: May 9, 2022

Proposal

In response to the request above, the Contractor proposes to perform the changes described for an increase / ~~decrease~~ in the contract sum in the amount of $ 17,255.68 and increase / decrease in the contract time of 0 calendar days.

A detailed breakdown of labor and material costs is attached hereto which includes all costs and time associated with the proposed change(s).

Signed: Blaine Prine Date: 4-25-22

Encl.: As Stated

Cc w/encl.:

Linda Briggs
Construction Services Division

Return to Committee Cover

BLAINE CONSTRUCTION CORPORATION
Pending Change Order (PCO) Breakdown Form

ADD CHANGE REQUEST

HAMBLEN COUNTY JUSTICE CENTER
MORRISTOWN, TN

BCC Job No.	85164
Moseley Job No.	590418
DATE:	4/20/2022
REVISION:	0

PCO- **TBD - UNDERCUT & REMEDIATE 416 CUBIC YARDS OF UNSUITABLE SOILS (18MAR22)**

Quoted By: BLAINE PRINE

SUMMARY OF WORK:

ADDITIONAL COSTS, PER CONTRACT UNIT PRICES, TO UNDERCUT & REMEDIATE/REPLACE 416 CUBIC YARDS OF UNSUITABLE SOILS ENCOUNTERED ON MARCH 18, 2022.

ITEM	DESCRIPTION	QTY	UNIT	LABOR U.P.	LABOR TOTAL	EQUIPMENT/MATERIAL U.P.	EQUIPMENT/MATERIAL TOTAL	SUBCONTR. TOTAL	TOTAL
				-	-	-	-	-	-
A	ADDITIONAL COSTS TO REMEDIATE 416 CUBIC YARDS OF UNSUITABLE SOILS AT THE CONTRACT-STIPULATED UNIT PRICE OF $41.48 PER CUBIC YARD. SEE ATTACHED UPDATED MAP AND GEOS FIELD REPORT, DATED MARCH 18, 2022.	1.0	LSUM	-	-	-	-	**17,255.68**	**17,255.68**
NOTES:									
1. N/A									
2. N/A									
					-		-	-	-
SUB-TOTALS ALL WORK					**-**		**-**	**17,255.68**	**17,255.68**
	Material Tax & Equipment Surcharge						-		-
	Labor Burden @ 42% Labor Totals				-				-
	OH & Profit @ 7% BCC Totals				-		-		-
	OH & Profit Subs @ 7% Sub-Totals - N/A THIS CHANGE							-	-
	Builders Risk Insurance @ 0.2% - N/A THIS CHANGE								-
	Payment & Performance Bonds @ 0.85% - N/A THIS CHANGE								-
							TOTAL COST		**$ 17,255.68**

Return to Committee Cover

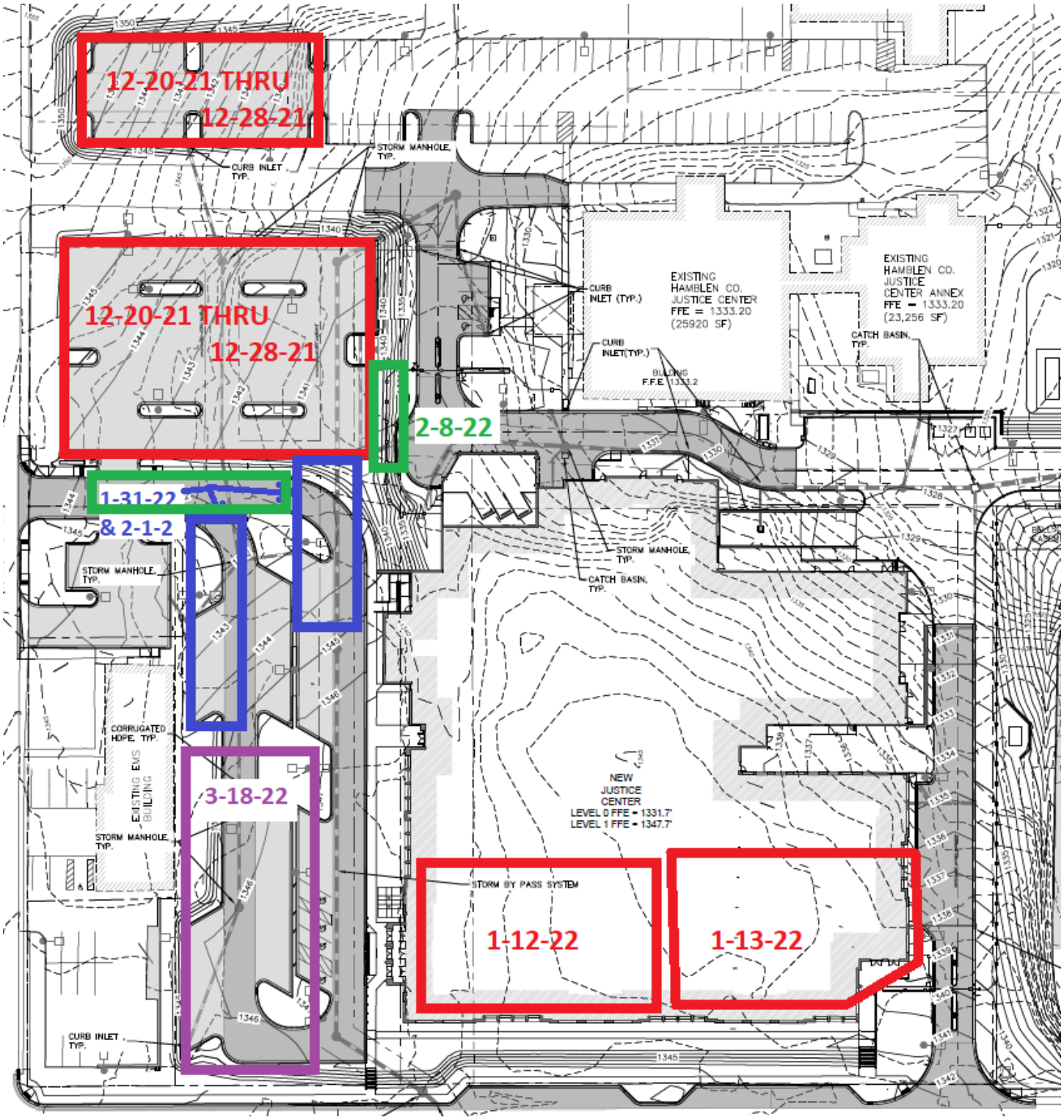

Return to Committee Cover

From:	Tony Pettit
To:	Adam Hicks
Cc:	Blaine Prine; Briggs, Linda; Bill Mayor; Ricky Lively; Jeff Sutherland
Subject:	[-EXTERNAL-] Re: Hamblen - Unsuitable Soil Undercuts March 18th, 2022
Date:	Wednesday, March 23, 2022 3:08:36 PM
Attachments:	image001.png image002.png image001.png image002.png

---

Thank you all.

Tony Pettit

BurWil Construction Company
1545 Western Avenue
Suite 208
Knoxville, TN. 37921
Office (865)409-4825
Cell (865) 776-3836

On Mar 23, 2022, at 12:48 PM, Adam Hicks <ahicks@geoservicesllc.com> wrote:

Blaine,

I observed this proofroll Friday when I was up there. The parking area west of level 1 was proofrolled and approximately 6 to 8 inches of wet soil and areas of organics were removed resulting in the 416 yds of undercut. I will get our field report submittal out as soon as I can.

Adam Hicks, P.E.
Project Manager
GEOS
GEOServices, LLC, Geotechnical and Materials Engineers
GEOServices, LLC
2561 Willow Point Way
Knoxville, Tennessee 37931
(865) 803-6021 cell
(865) 539-8242 office
email: ahicks@geoservicesllc.com

From: Blaine Prine <bprine@blaineconstruction.com>
Sent: Wednesday, March 23, 2022 11:51 AM
To: Adam Hicks <ahicks@geoservicesllc.com>

Cc: tpettit@burwil.com; Briggs, Linda <lbriggs@moseleyarchitects.com>; Bill Mayor <bbrittain@co.hamblen.tn.us>; Ricky Lively <rlively@blaineconstruction.com>; Jeff Sutherland <jsutherland@blaineconstruction.com>
Subject: Hamblen - Unsuitable Soil Undercuts March 18th, 2022

Adam – can you please check with your tech and confirm that a proof roll performed on 3/18 (last Friday) resulted in the need for undercut of unsuitable soils below design grades?
We failed to notify everyone of this.
Thanks,
Blaine Prine
Sr. Project Manager
Blaine Construction Corporation
Cell: 865-310-1634

From: Adam Shepherd <ashepherd@ettl1.com>
Sent: Wednesday, March 23, 2022 11:05 AM
To: Blaine Prine <bprine@blaineconstruction.com>; Ricky Lively <rlively@blaineconstruction.com>
Cc: Nicholas Overbay <nroverbay@hotmail.com>
Subject: [-EXTERNAL-] HCJ Undercuts March 18th, 2022

Blaine,

On 3/18/22 we undercut 416 yards in the area located under where the topsoil stockpile was left. Let me know if you have any questions.

Thanks,
Adam Shepherd
Mobile: 423-278-8266

PROJECT REPORT

GEOServices, LLC, Geotechnical and Materials Engineers

Phone: (865) 539-8242
www. geoservicesllc.com

Project Information			
Project Name:	Hamblen County Justice Center	Visit Date:	3/18/2022
Project Address:	440 N. Jackson Street - Morristown, TN 37814	Project Number:	22-211599
Client Name:	Office of Hamblen County Mayor	Work Order:	22933
Project Contact:	Johnna Harrell	GEOS Rep:	Adam Hicks

Weather and Temperature	
Weather Conditions:	Fair
Ambient Temperature:	50 - 60

Site Contact Notification	
Site Notification:	Yes
Name of Person Notified:	Ricky Lively with Blaine

Services Performed

Proofroll observations.

Observations and Recommendations

Were any Deviations Noted on Todays Visit:	No

GEOS personnel traveled to the site to observe a proofroll of the parking area west of level 1. GEOS personnel was informed the area was approximately 4.5 to 5 feet below planned subgrade elevation. Approximately 6 to 8 inches of wet soil and areas of organics was removed or approximately 416 yds of undercut. Minimal rutting was observed of the exposed soil after the undercut. Based on our field observations, the area was judged suitable for structural fill placement.

Representative: Adam Hicks **Reviewed by:** Adam Hicks

Recommendations made by GEOServices do not constitute authorization to perform any additional work without owner's authorization. GEOServices is not responsible for the supervision or direction of the actual work of the contractor, or for site safety. Services provided by GEOServices do not relieve the contractor of his responsibilities for performing the work in accordance with the plans and specifications.

GEOServices | 2561 Willow Point Way | Knoxville, TN 37931

Phone: (865) 539-8242
www. geoservicesllc.com

Report Pictures

Photo 1 - Overall area

MOSELEYARCHITECTS

Transmittal

The Hub at Waverly, Suite 425, Charlotte, NC 28277

PROJECT:	Hamblen County Justice Center 590418	DATE:	5/11/2022
SUBJECT:	CO#03	TRANSMITTAL ID:	00506
PURPOSE:	For your review and comment	VIA:	Info Exchange

FROM

NAME	COMPANY	EMAIL	PHONE
Linda Briggs The Hub at Waverly, Suite 425 Charlotte, NC 28277	Moseley Architects	lbriggs@moseleyarchitects.com	(704) 540-3755 x2926

TO

NAME	COMPANY	EMAIL	PHONE
Billie Russell United States	BurWil Construction Company, Inc.	brussell@burwil.com	
Blaine Prine 6510 Deane Hill Drive Knoxville TN 37919 United States	Blaine Construction Corporation	bprine@blaineconstruction.com	(865) 693-8900
Jaron Dowalter United States	BurWil Construction Company, Inc.	jdowalter@burwil.com	
Steve Jones	Blaine Construction Corporation	sjones@blaineconstruction.com	(865) 693-8900
Tony Pettit	BurWil Construction Company, Inc.	Tpettit@burwil.com	(865) 409-4825

REMARKS: Please see attached CO#03 signed and ready for processing.

Linda

DESCRIPTION OF CONTENTS

QTY	DATED	TITLE	NOTES
1	5/11/2022	CO#03.pdf	

MOSELEYARCHITECTS

Change Order

Hamblen County Justice Center

Change Order Number: 04

Project # 590418

To Contractor:

Blaine Construction Corporation
6510 Deane Hill Drive
Knoxville, TN 37919

Change Order Date: 06/01/2022

Contract Date: 10/18/2021

The Contract is hereby revised by the following items:

PCO	Description	Days	Amount
003	Change response to RFI-014 to run a new feed for the (4) existing light poles from 911 Center	0	$6,357.00
	Total for this Change Order:	**0 Days**	**$6,357.00**

The original Contract Sum was	$92,208,500.48
Sum of changes by prior Change Orders	$135,788.68
The Contract Sum prior to this Change Order was	$92,344,289.16
The Contract Sum will be changed by this Change Order in the amount of	$6,357.00
The new Contract Sum including this Change Order will be	**$92,350,646.16**
The Contract duration will be changed by	0 Days
The revised Substantial Completion date as of this Change Order is	2/7/2024

ARCHITECT	CONTRACTOR	OWNER
Moseley Architects	Blaine Construction Corporation	Hamblen County
6210 Ardrey Kell Rd, Suite 425 Charlotte, NC 28277	6510 Deane Hill Drive Knoxville, TN 37919	511 W. 2nd North St. Morristown, TN 37814
SIGNATURE DocuSigned by: Linda Briggs ECDD1DD89EC04AD...	SIGNATURE	SIGNATURE
DATE 6/1/2022	DATE	DATE

MOSELEYARCHITECTS
6210 Ardrey Kell Road, The Hub at Waverly, Suite 425 • Charlotte, NC 28277
(704) 540-3755

Potential Change Order No. 003 Scope of Work

Project Name	Arch Project No.	Date
Hamblen County Justice Center	**590418**	**5/23/2022**
Subject	Specification No.	Drawing No.
Change response to RFI-014 to run a new feed for the (4) existing light poles from 911 Center	**NA**	**NA**

Attention	Created By
Blaine Prine, Blaine Construction Corporation	**Linda Briggs**

This is not a change order nor a directive to proceed with the work described herein. Please submit with the form below an itemized material cost and time proposal for the changes in the contract sum and contract time for the following proposed modification(s) to the contract:

Description: As per discussion during meetings it was determined that Contractor has proceeded on T&M to re-feed the existing site light poles from Emergency 911 Center. It was confirmed that there is adequate spare breakers of the voltage necessary to accommodate the re-feeding of the site lighting poles that are to remain. Refer to attached sketch which was part of RFI-014R for reference.

Receipt of your proposal is requested by: June 7, 2022

Proposal

In response to the request above, the Contractor proposes to perform the changes described for an increase / decrease in the contract sum in the amount of $ 6,357.00 and increase / decrease in the contract time of 0 calendar days.

A detailed breakdown of labor and material costs is attached hereto which includes all costs and time associated with the proposed change(s).

Signed: Blaine Prine Date: 5/24/22

Encl.: As Stated

Cc w/encl.:

Linda Briggs
Construction Services Division

Return to Committee Cover

RFI-014R1

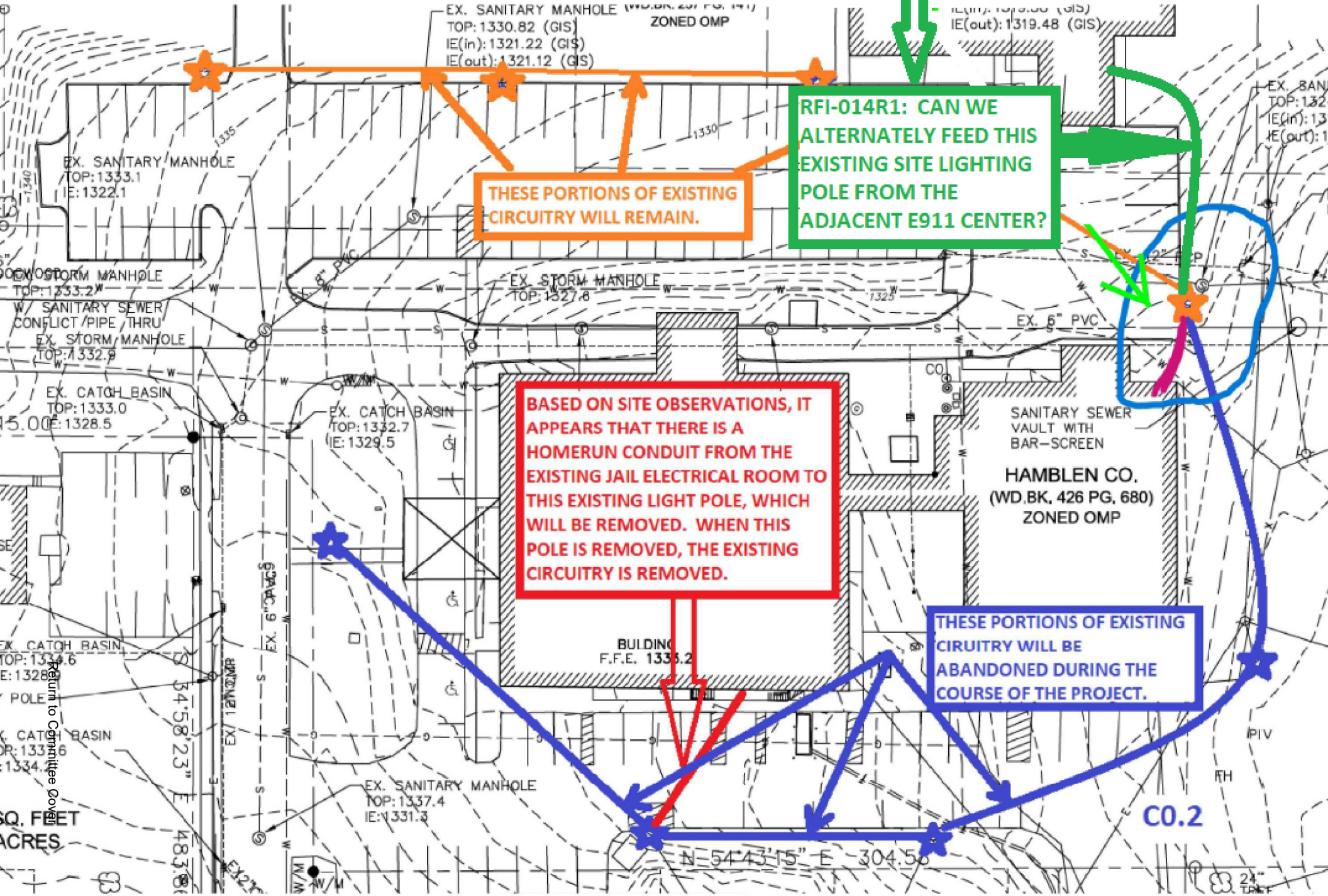

Return to Committee Cover

BLAINE CONSTRUCTION CORPORATION
Pending Change Order (PCO) Breakdown Form

ADD CHANGE REQUEST

HAMBLEN COUNTY JUSTICE CENTER
MORRISTOWN, TN

BCC Job No.	85164
Moseley Job No.	590418
DATE:	4/21/2022
REVISION:	0

PCO- **-003 - ADDITIONAL COSTS TO RE-FEED EXISTING JAIL SITE LIGHTING CIRCUIT, FED FROM PANEL IN THE E911 CENTER.**

Quoted By: BLAINE PRINE

SUMMARY OF WORK:

THIS PCO REFLECTS THE COSTS TO RE-FEED EXISTING JAIL SITE LIGHTING CIRCUIT, FED FROM PANEL IN THE E911 CENTER.

ITEM	DESCRIPTION	QTY	UNIT	LABOR U.P.	LABOR TOTAL	EQUIPMENT/MATERIAL U.P.	EQUIPMENT/MATERIAL TOTAL	SUBCONTR. TOTAL	TOTAL
				-	-	-	-	-	-
A	PCO-003 - SUBCONTRACTOR (SERVICE ONE) PRICING - SEE ATTACHED BREAKDOWN	1.0	LSUM	-	-	-	-	**5,015.34**	**5,015.34**
B	PCO-003 - BLAINE DIRECT PURCHASES OF MATERIALS	1.0	LSUM	-	-	811.62	811.62	**-**	**811.62**
NOTES:									
1. N/A									
2. N/A									
					-		-	-	-
SUB-TOTALS ALL WORK					**-**		**811.62**	**5,015.34**	**5,826.96**
	Material Tax & Equipment Surcharge						79.13		79.13
	Labor Burden @ 40% Labor Totals				-				-
	OH & Profit @ 15% BCC Totals				-		133.61		133.61
	OH & Profit Subs @ 5%:							250.77	251
	Builders Risk Insurance @ 0.2%								13
	Payment & Performance Bonds @ 0.85%								54
							TOTAL COST	**$**	**6,357**

Return to Committee Cover

SERVICE ONE INC.

Blaine Construction Company
Hamblen County Justice Center
Job: 24465 Under man project 24090
Install new 1 inch feeder from 911 building to re-feed
Existing 3 pole lights in exist parking lot

		QTY	UNIT	MH	Labor Cost	Materials Unit	Equip Cost	Sub C Cost	Total Labor	Total Material	Total Equip	Total Sub C	TOTAL
1	Excavation 80 ft X 1ft X 2ft	6	CY	0.69	$58.00		$35.00		$240.12	$0.00	$210.00	$0.00	$450.12
2	Remove Spoils to on-site Location	6	CY	0.69	$58.00		$35.00		$240.12	$0.00	$210.00	$0.00	$450.12
3	Install 1 inch PVC from building to first pole	100	ft	0.075	$58.00	$2.68	$0.00	$0.00	$435.00	$268.00	$0.00	$0.00	$703.00
4	Misc 90 ells, concrete chairs, tie wire	1	LS	8	$58.00	$210.00			$464.00	$210.00	$0.00	$0.00	$674.00
5	Install 1 ich rigid conduit	20	ft	0.099	$58.00	$1.30			$114.84	$26.00	$0.00	$0.00	$140.84
6	Install 1 inch EMT Conduit	60	ft	0.094	$58.00	$1.44			$327.12	$86.40	$0.00	$0.00	$413.52
7	install 1 inch Rigid LB w/cover and gasket	1	ea	0.35	$58.00	$28.00	$0.00		$20.30	$28.00	$0.00	$0.00	$48.30
8		0			$58.00				$0.00	$0.00	$0.00	$0.00	$0.00
9		0			$58.00				$0.00	$0.00	$0.00	$0.00	$0.00
10	Core Drill 1 inch into building	1	ea	2	$58.00			$0.00	$116.00	$0.00	$0.00	$0.00	$116.00
11	Backfill over encasement and Clean Up	6	cy	0.69	$58.00		$35.00		$240.12	$0.00	$210.00	$0.00	$450.12
12	Supervision	1	Hr	8	$80.00				$640.00	$0.00	$0.00	$0.00	$640.00
13									$0.00	$0.00	$0.00	$0.00	$0.00
												$0.00	
	SUBTOTALS								$2,837.62	$618.40	$630.00	$0.00	$4,086.02
	Sales Tax on Materials 9.25%									$57.20			$57.20
	Small Tools and Consumables 4% of Labor								$113.50				$113.50
	SUBTOTAL								$2,951.12	$675.60	$630.00	$0.00	$4,256.73
	Bond Adder For C/O 1 %												$42.57
													$4,299.29
	Insurance Adder For C/O 1 %												$42.99
	SUB TOTAL												$4,342.29
	OVERHEAD 10 %												$434.23
													$4,776.52
	PROFIT 5 %												$238.83
	CHANGE ORDER TOTAL												**$5,015.34**

Return to Committee Cover

How doers get more done.

1930 W ANDREW JOHNSON
MORRISTOWN, TN 37814 (423)581-2085

0744 00002 34427 03/04/22 01:18 PM
SALE CASHIER TOM

048243166107 WIRE <A>
10-2 UF W/G 250 FT
2@349.00 698.00
034481066866 JUNCT BOX <A> 16.98
JUNCTION BOX 6X6X4
034481066835 JUNCT BOX <A> 13.60
JUNCTION BOX 4X4X4
638060079966 ELECTTAPE <A> 5.47
ORANGE ELECTTAPE.75INX66FTX7MM
638060079973 ELECTTAPE <A> 5.47
BROWN ELECTTAPE.75 INX66FTX7MM

SUBTOTAL 739.52
SALES TAX 72.10
TOTAL $811.62
XXXXXXXXXXXX0852 HOME DEPOT
USD$ 811.62
AUTH CODE 004848/4023849 TA

BLAINE CONSTRUCTION CORP
SUTHERLAND JEFF
Chip Read
AID A0000000049999D8400305 THD PLCC PRO
X

PRO XTRA MEMBER STATEMENT

PRO XTRA ###-###-8900 SUMMARY
THIS RECEIPT PO/JOB NAME: ~~851643~~ 85164

2022 PRO XTRA SPEND 03/03: $7,444.88
INCLUDES:
2022 PROXTRA SAVINGS 03/03: $22.09

As of 03/04/2022 your Paint Rewards level is Silver; Spend 5619.22 more in qualifying paint purchases to earn Gold (20.0% off) on select paint items.

Get the CREDIT LINE your business needs PLUS earn Perks 4X FASTER when you join Pro Xtra, register, & use your Pro Xtra Credit Card. Apply and SAVE UP TO $100. Learn more at homedepot.com/credit

0744 03/04/22 01:18 PM

0744 02 34427 03/04/2022 8968

RETURN POLICY DEFINITIONS

	POLICY ID	DAYS	POLICY EXPIRES ON
A	11	365	03/04/2023

****
DID WE NAIL IT?

Take a short survey for a chance TO WIN A $5,000 HOME DEPOT GIFT CARD

Opine en español

www.homedepot.com/survey

User ID: HTK 69887 69145
PASSWORD: 22154 69143

Entries must be completed within 14 days of purchase. Entrants must be 18 or older to enter. See complete rules on website. No purchase necessary.

PCO-003

BLAINE DIRECT PURCHASE OF MATERIALS RELATED TO SITE LIGHTING CIRCUITRY RE-WORK.

Vendor # or PO#		Invoice Amount	$ 811.62
Invoice No. 4023849		Invoice Date	3-4-22
Job # 85164		Due Date	
Phase Code 01499	Item No. 1	Cost Type	8
Completed By: WSM		Date	3-7-22
Approved By: BP		Date	3-11-22
Note:			

BLAINE
Construction Corporation

BLAINE CONSTRUCTION CORPORATION
P. O. Box 10147
Knoxville, TN 37939
6510 Deane Hill Drive – 37919
Phone: 865-693-8900
Fax: 865-539-2212

JOB WORK ORDER

JOB NAME HAMBLEN

WORK ORDER NO. 85164-001-S1 DATE 3-16-22

BLAINE CONST. CORP. [X] DIRECTS [ ] IS AUTHORIZED BY (CHECK ONE)

SERVICE ONE to furnish the following materials and/or services

as outlined below:

CHECK ONE

[ ] THIS WORK WILL BE REIMBURSED TO BCC BY INVOICE AND BACKCHARGE

[ ] THIS WORK WILL BE ADDED TO SUBCONTRACT OR PURCHASE ORDER

[X] THIS WORK WILL BE ADDED TO BCC CONTRACT BY FORMAL CHANGE ORDER FROM OWNER/ARCH

THE FOLLOWING MATERIALS AND/OR SERVICES ARE TO BE FURNISHED AS OUTLINED BELOW:

3 MEN X 8 HRS = 24 MANHRS.

TRENCH & INSTALL CONDUIT FROM E911 CENTER TO NEAREST EXTERIOR LIGHT POLE BASE

ACCEPTED.

By*: [signature]

TITLE SUPER

ACCEPTED:

BLAINE CONSTRUCTION CORPORATION

By SUPT.* [signature]

*ADDITIONAL COMMENTS

INSTRUCTIONS:

1. This form is to be used for any extra work authorization.
2. Work Order No. and Date must be filled in.
3. State clearly work to be done and check category of basis of payment.
4. Obtain acceptance of parties involved or indicate any refusal of agreement.
5. Distribution: White-Sub or Owner, Green-BCC Office, Pink-BCC Office, Yellow-BCC Superintendent

Return to Committee Cover

BLAINE
Construction Corporation

BLAINE CONSTRUCTION CORPORATION
P. O. Box 10147
Knoxville, TN 37939
6510 Deane Hill Drive – 37919
Phone: 865-693-8900
Fax: 865-539-2212

JOB WORK ORDER

JOB NAME HAMBLEN

WORK ORDER NO. 85164-002-51 DATE 3-21-22

BLAINE CONST. CORP. [X] DIRECTS [ ] IS AUTHORIZED BY (CHECK ONE)

_____ to furnish the following materials and/or services

as outlined below:

CHECK ONE

[ ] THIS WORK WILL BE REIMBURSED TO BCC BY INVOICE AND BACKCHARGE

[ ] THIS WORK WILL BE ADDED TO SUBCONTRACT OR PURCHASE ORDER

[X] THIS WORK WILL BE ADDED TO BCC CONTRACT BY FORMAL CHANGE ORDER FROM OWNER/ARCH

THE FOLLOWING MATERIALS AND/OR SERVICES ARE TO BE FURNISHED AS OUTLINED BELOW:

3 MEN X 8 HRS = 24 MNHRS

COMPLETE CONDUIT INSIDE E-911 CENTER, PULL WIRE, TERMINATE, JOB COMPLETE

ACCEPTED:

By*: [signature]

TITLE SUPER

ACCEPTED:

BLAINE CONSTRUCTION CORPORATION

By SUPT.* [signature]

*ADDITIONAL COMMENTS

INSTRUCTIONS:

1. This form is to be used for any extra work authorization.
2. Work Order No. and Date must be filled in.
3. State clearly work to be done and check category of basis of payment.
4. Obtain acceptance of parties involved or indicate any refusal of agreement.
5. Distribution: White-Sub or Owner, Green-BCC Office, Pink-BCC Office, Yellow-BCC Superintendent

Return to Committee Cover

MOSELEYARCHITECTS

Transmittal

The Hub at Waverly, Suite 425, Charlotte, NC 28277

PROJECT:	Hamblen County Justice Center 590418	DATE:	6/1/2022
SUBJECT:	CO#04	TRANSMITTAL ID:	00573
PURPOSE:	For your review and comment	VIA:	Info Exchange

FROM

NAME	COMPANY	EMAIL	PHONE
Linda Briggs The Hub at Waverly, Suite 425 Charlotte, NC 28277	Moseley Architects	lbriggs@moseleyarchitects.com	(704) 540-3755 x2926

TO

NAME	COMPANY	EMAIL	PHONE
Billie Russell United States	BurWil Construction Company, Inc.	brussell@burwil.com	
Blaine Prine 6510 Deane Hill Drive Knoxville TN 37919 United States	Blaine Construction Corporation	bprine@blaineconstruction.com	(865) 693-8900
Jaron Dowalter United States	BurWil Construction Company, Inc.	jdowalter@burwil.com	
Steve Jones	Blaine Construction Corporation	sjones@blaineconstruction.com	(865) 693-8900
Tony Pettit	BurWil Construction Company, Inc.	Tpettit@burwil.com	(865) 409-4825

REMARKS:

Blaine,

Please see attached CO#04 ready for your signature.

Linda

DESCRIPTION OF CONTENTS

QTY	DATED	TITLE	NOTES
1	6/1/2022	590418 Hamblen County CO#04.pdf	

BurWil
ConstructionCompany

"Using Today's Technology to
Build Tomorrow's Landmarks"

June 8, 2022

Office of Hamblen County Mayor
Attn: Honorable Mayor Bill Brittain
Hamblen County (TN) Government
511 West Second North Street
Morristown, TN 37814

Hamblen County Justice Center-Request for Additional Compensation Due to Extended Pre-construction Services

Dear Mayor Brittain:

Please find herein, BurWil's request for additional compensation for project manager services, due to the protracted length of pre-construction activities. BurWil requests that the Mayor review the following articles in our agreement between The Office of Hamblen County Mayor and BurWil Construction dated August 20, 2020. The following articles, of which pages are attached, are pertinent to this change request. Article 1.3.7, outlines the milestone schedule of the project and states that the commencement of construction was anticipated in January/February 2021. Article 1.6 states that information may materially change and the Owner and Project Manager shall appropriately adjust.....the Project Manager's compensation.

Please consider the above information and note that the Notice to Proceed for construction was January 4, 2022. Pre-construction services commenced in September of 2020 and concluded in December 2021, Pre-construction services durations were 16 months and not the four or five months as set forth in Article 1.3.7 of our agreement. This time did include an exercise of value engineering and re-bidding the project. Construction started in January of 2022 and has an anticipated duration of 25 months.

As stated above, protracted pre-construction services has resulted in BurWil requesting additional pre-construction services. Our proposed Services, Exhibit C of the aforementioned project manager agreement, identified $75,000 for four or five months of pre-construction, or approximately $15,000 per month ($75,000/5). The equation therefore would result as follows; an additional nine months of pre-construction services at $15,000/month would equal $135,000.00. However, BurWil would agree and request that the agreement be amended to reflect only an additional $95,000.00 for additional compensation for the pre-construction services.

Also, please refer to Article 1.4.5 which identifies Michael Scott as a representative of BurWil. Mr. Scott is no longer an employee of BurWil. Therefore, we would request that as part of this change request, we modify this article to remove Mr. Scott's name and add Jaron Dowalter, project manager as representative in his place. Please find Mr. Dowalter's resume attached to this change request.

Herein is the summary for the Change Request:

Original negotiated total for the agreement	$ 975,000
Additional Pre-Construction Services for 9 months	$ 95,000
Total Project Agreement including this request	$1,070,000

P. O. Box 637 · 620 Locust St. · Bristol, TN 37621
Office (423) 968-4158 · Fax (423) 968-3199
www.burwil.com

1545 Western Ave. Suite 208 · Knoxville, TN 37921
Office (865) 409-4825 · Fax (865) 409-4835

If the above change request is acceptable, and upon approval and agreement with you, BurWil will prepare a change amendment to the agreement, inclusive of including Mr. Dowalter's information as an additional representative. If you have any questions or comments, please do not hesitate to contact us.

Very Truly Yours,

Tony Pettit, Manager
Knoxville Operations
BurWil Construction Company, Inc.
1545 Western Avenue
Suite 208
Knoxville, TN 37921
865-409-4825
865-776-3836

TP:bjr

C: W. Prince
N. Self

Return to Committee Cover

Jaron Dowalter
Project Manager/Estimator

Mr. Dowalter has 15 years of construction experience . Jaron joined BurWil Construction as a Project Manager/Estimator in our Knoxville Operations on June 21, 2021.

PROJECT ROLE AND RESPONSIBILITIES

Mr. Dowalter's role and responsibilities as Project Manager/Estimator include :

Pre-construction:
- Estimating/Budgeting
- Constructability Reviews
- Scheduling
- Value Engineering
- Bid Package Development
- Project Bid Process

Construction:
- Procurement
- Scheduling
- Shop drawing review
- Support of field staff
- Quality Control
- Safety site plan
- Project closeout

RELATED PROJECTS

General Contractor (Project Manager):

FirstBank Renovation—Knoxville, TN

Caliber Collision—Sevierville, TN

Steve's Hometown Chevrolet Dealership—Fruitland, IN

Dennis Dillon RV Center—Boise, ID

Dennis Dillon Chevrolet Office Remodel—Boise, ID

Dennis Dillon Site Development—Boise, ID

Dennis Dillon Storage Facility—Boise, ID

Design Build Contractor (Project Executive):

Kern's Food Hall—Knoxville, TN

Oak Grove Center—Murrieta, CA

Oak Grove at the Ranch—Perris, CA

Menlo Recycling—Hemet, CA

Cougar Winery—Temecula, CA

Charles Schwab—Temecula, CA

Eye Associate, Temecula, CA

Ramko Industrial Center Façade Rehab—Hemet, CA

Ramko Manufacturing - Hemet, CA

REFERENCES

Dennis Dillon Auto Group
Tracy Crane, General Counsel
(208) 371-9523
tracycrane@gmail.com

Amanda Ryan, Architect
Formerly w/BRS Architect
(775) 443-9472
Amanda.ryan.designs@gmail.com

EDUCATION

Pt. Loma Nazarene College
San Diego, CA
National University
San Bernardino, CA
California Baptist University
Riverside, CA
1997-2006

EXPERIENCE

06/2021-Present
BurWil Construction Co.

01/2021-06/2021
CSDI Construction
Project Manager

2015-2020
K2 Construction, Inc.
Project Manager

2007-2015
FDC Commercial Construction
Vice President

2005-2007
Progressive Planning Group
Owner

BurWil
Construction Company

Return to Committee Cover

Several residential houses and support buildings that will be demolished.

§ 1.3.4 Funding source:
(Identify anticipated funding sources, and deadlines or schedules related to funding, as well as whether funding is authorized.)

Hamblen County

§ 1.3.5 The Owner's budget for the Project:
(Provide the Owner's total budget for the Project and, if known, a line-item breakdown of all costs described in Section 3.5.1.)

$60 to $65 million inclusive of design, construction, FF&E, and fees

§ 1.3.6 The Owner's intended procurement or delivery method for design and construction of the Project:
(Identify method such as competitive bid, negotiated contract, multiple prime contracts, or construction management.)

Competitive bid for prequalified contractors

§ 1.3.7 Anticipated scheduling information:
(Include overall Project duration and milestones. If known, include proposed dates for commencement and completion of design, commencement and completion of construction, occupancy, and any other critical scheduling information for the Project.)

.1 Anticipated dates of Project commencement and completion:

.1 Commencement of design, if other than the date of this Agreement:

N/A

.2 Completion of design:

September 2020

.3 Commencement of construction:

January / February 2021

.4 Completion of construction:

TBD

.2 Other Project scheduling information:

§ 1.3.8 Other information regarding the Project:
(Identify any other available studies or reports, as well as special characteristics or needs of the Project, such as historic preservation requirements, not provided elsewhere.)

§ 1.3.9 The Owner's anticipated sustainable objective for the Project, if any:
(Identify the Owner's sustainable objective for the Project such as sustainability certification, benefit to the environment, enhancement to the health and well-being of building occupants, or improvement of energy efficiency.)

None

AIA Document C172™ – 2014. Copyright © 2014 by The American Institute of Architects. All rights reserved. The "American Institute of Architects," "AIA," the AIA Logo, and "AIA Contract Documents" are registered trademarks and may not be used without permission. This document was produced by AIA software at 10:01:43 ET on 08/19/2020 under Order No.6755950200 which expires on 10/15/2020, is not for resale, is licensed for one-time use only, and may only be used in accordance with the AIA Contract Documents® Terms of Service. To report copyright violations, e-mail copyright@aia.org.
User Notes: (1899121507)

Return to Committee Cover

§ 1.4 Project Team
§ 1.4.1 The Owner will retain the following consultants and contractors:
(List name, discipline, address, and other information.)

Moseley Architects
6210 Ardrey Kell Road
Suite 425
Charlotte, NC 28277

§ 1.4.2 The Project Manager will retain the consultants identified in Sections 1.4.2.1 and 1.4.2.2:
None anticipated

§ 1.4.2.1 Consultants retained under Basic Services:
(List name, discipline, address, and other information.)

None

§ 1.4.2.2 Consultants retained under Additional Services:
(List name, discipline, address, and other information.)

None Identified

§ 1.4.3 The Owner identifies the following representative in accordance with Section 5.4:
(List name, address, and other information.)

Bill Brittain
County Mayor
511 West Second North Street
Morristown, TN 37814

§ 1.4.4 The persons or entities, in addition to the Owner's representative, who are required to review and approve the Project Manager's submittals to the Owner are as follows:
(List name, address, and other information.)

Tim Horner
7476 Circle Point Drive
Talbott, TN 37877

§ 1.4.5 The Project Manager identifies the following representative in accordance with Section 2.4:
(List name, address, and other information.)

Tony Pettit
Manager of Knoxville Operations
1545 Western Ave
Knoxville, TN 37921
865-409-4825 (o)
865-776-3836 cell

Michael Scott
Assistant Project Manager
1545 Western Ave
Knoxville, TN 37921
865-409-4825 (o)

AIA Document C172™ – 2014. Copyright © 2014 by The American Institute of Architects. All rights reserved. The "American Institute of Architects," "AIA," the AIA Logo, and "AIA Contract Documents" are registered trademarks and may not be used without permission. This document was produced by AIA software at 10:01:43 ET on 08/19/2020 under Order No.6755950200 which expires on 10/15/2020, is not for resale, is licensed for one-time use only, and may only be used in accordance with the AIA Contract Documents® Terms of Service. To report copyright violations, e-mail copyright@aia.org.
User Notes: (1899121507)

Return to Committee Cover

865-315-3315 cell

Stacy Prince
Safety Director
620 Locust Street
Bristol, TN 37620
423-968-4158 (o)
423-483-5186 cell

§ 1.5 Other Initial Information on which the Agreement is based:

§ 1.6 The Owner and Project Manager may rely on the Initial Information. Both parties, however, recognize that such information may materially change and, in that event, the Owner and the Project Manager shall appropriately adjust the schedule, the Project Manager's services, and the Project Manager's compensation.

ARTICLE 2 PROJECT MANAGER'S RESPONSIBILITIES

§ 2.1 The Project Manager shall provide the services as set forth in this Agreement.

§ 2.2 The Project Manager shall perform its services consistent with the skill and care ordinarily provided by project managers practicing in the same or similar locality under the same or similar circumstances. The Project Manager shall perform its services as expeditiously as is consistent with such skill and care and the orderly progress of the Project.

(Paragraph deleted)

§ 2.4 The Project Manager shall identify a representative authorized to act on behalf of the Project Manager with respect to the Project.

§ 2.5 Except with the Owner's knowledge and consent, the Project Manager shall not engage in any activity, or accept any employment, interest or contribution that would reasonably appear to compromise the Project Manager's judgment with respect to the Project.

§ 2.6 The Project Manager shall provide its services in cooperation with the services provided by the Owner and the Owner's consultants and contractors and shall coordinate its services with those services provided by the Owner and the Owner's consultants and contractors. The Project Manager shall be entitled to rely on the accuracy and completeness of services and information furnished by the Owner and the Owner's consultants and contractors. The Project Manager shall provide prompt written notice to the Owner if the Project Manager becomes aware of any error, omission, or inconsistency in such services or information.

§ 2.7 **Insurance.** The Project Manager shall maintain the following insurance for the duration of this Agreement. If any of the requirements set forth below exceed the types and limits the Project Manager normally maintains, the Owner shall reimburse the Project Manager for any additional cost as set forth in Section 10.6.3.

§ 2.7.1 Commercial General Liability with policy limits of not less than One Million ($ 1,000,000) for each occurrence and Two Million ($ 2,000,000) in the aggregate for bodily injury and property damage.

§ 2.7.2 Automobile Liability covering vehicles owned by the Project Manager and non-owned vehicles used by the Project Manager with policy limits of not less than One Million ($ 1,000,000) per claim and Two Million ($ 2,000,000) in the aggregate for bodily injury and property damage along with any other statutorily required automobile coverage.

§ 2.7.3 The Project Manager may achieve the required limits and coverage for Commercial General Liability and Automobile Liability through a combination of primary and excess liability insurance, provided such primary and excess insurance policies result in the same or greater coverage as those required under Sections 2.7.1 and 2.7.2.

AIA Document C172™ – 2014. Copyright © 2014 by The American Institute of Architects. All rights reserved. The "American Institute of Architects," "AIA," the AIA Logo, and "AIA Contract Documents" are registered trademarks and may not be used without permission. This document was produced by AIA software at 10:01:43 ET on 08/19/2020 under Order No.6755950200 which expires on 10/15/2020, is not for resale, is licensed for one-time use only, and may only be used in accordance with the AIA Contract Documents® Terms of Service. To report copyright violations, e-mail copyright@aia.org.
User Notes: (1899121507)

Return to Committee Cover

AIA® Document G701™ – 2017

Change Order

PROJECT: *(Name and address)*
HAMBLEN COUNTY JUSTICE CTR
440 NORTH JACKSON ST.
MORRISTOWN TN 37814

CONTRACT INFORMATION:
Contract For: PROJECT MANAGER

Date: AUGUST 20, 2021

CHANGE ORDER INFORMATION:
Change Order Number: 001

Date: JUNE 13, 2022

OWNER: *(Name and address)*
HAMBLEN COUNTY GOV.
511 WEST SECOND NORTH ST
MORRISTOWN TN 37814

ARCHITECT: *(Name and address)*
MOSELEY ARCHITECTS P.C.
6210 ARDREY KELL ROAD
THE HUB AT WAVERLY
SUITE 425
CHARLOTTE NC 28277

CONTRACTOR: *(Name and address)*
BURWIL CONSTRUCTION CO. INC.
620 LOCUST STREET
BRISTOL, TN 37621

THE CONTRACT IS CHANGED AS FOLLOWS:
(Insert a detailed description of the change and, if applicable, attach or reference specific exhibits. Also include agreed upon adjustments attributable to executed Construction Change Directives.)
This change order provides an additional 9 months of preconstruction services per attached letter dated June 8, 2022.

The original Contract Sum was	$	975,000.00
The net change by previously authorized Change Orders	$	0.00
The Contract Sum prior to this Change Order was	$	975,000.00
The Contract Sum will be increased by this Change Order in the amount of	$	95,000.00
The new Contract Sum including this Change Order will be	$	1,070,000.00

The Contract Time will be increased by Zero (0) days.
The new date of Substantial Completion will be AUGUST 4, 2024

NOTE: This Change Order does not include adjustments to the Contract Sum or Guaranteed Maximum Price, or the Contract Time, that have been authorized by Construction Change Directive until the cost and time have been agreed upon by both the Owner and Contractor, in which case a Change Order is executed to supersede the Construction Change Directive.

NOT VALID UNTIL SIGNED BY THE ARCHITECT, CONTRACTOR AND OWNER.

	BURWIL CONSTRUCTION COMPANY, INC.	HAMBLEN COUNTY GOVERNMENT
ARCHITECT *(Firm name)*	**CONTRACTOR** *(Firm name)*	**OWNER** *(Firm name)*
	Wm. H. Prince, Sr.	
SIGNATURE	**SIGNATURE**	**SIGNATURE**
	Wm. H. Prince, Sr./CEO	
PRINTED NAME AND TITLE	**PRINTED NAME AND TITLE**	**PRINTED NAME AND TITLE**
	06/09/2022	
DATE	**DATE**	**DATE**

AIA Document G701™ – 2017. Copyright © 1979, 1987, 2000 , 2001 and 2017 by The American Institute of Architects. All rights reserved. The "American Institute of Architects," "AIA," the AIA Logo, and "AIA Contract Documents" are registered trademarks and may not be used without permission. This document was produced by AIA software at 16:02:35 ET on 06/09/2022 under Order No.9227095913 which expires on 10/16/2022, is not for resale, is licensed for one-time use only, and may only be used in accordance with the AIA Contract Documents® Terms of Service. To report copyright violations, e-mail copyright@aia.org.
User Notes:

Return to Committee Cover

(3B9ADA56)

BurWil
ConstructionCompany

"Using Today's Technology to
Build Tomorrow's Landmarks"

June 9, 2022

Office of Hamblen County Mayor
Attn: Honorable Mayor Bill Brittain
Hamblen County (TN) Government
511 West Second North Street
Morristown, TN 37814

Letter to Recommend Award of Laundry Service Equipment

Dear Mayor Brittain:

BurWil Construction, the Project Manager, presents the following information and recommendation to award the laundry service equipment contract to Laundry Equipment of Tennessee in the lump sum amount of $70,834.00. Hamblen County solicited sealed proposals for the furnishing and installation of the laundry equipment. We have reviewed the proposals and all specifications were met.

Please see the attached bid tabulation for bidders' information.

Please contact us for any questions or comments regarding the above.

Very Truly Yours,

Tony Pettit

Tony Pettit, Manager
Knoxville Operations
BurWil Construction Company, Inc.
1545 Western Avenue
Suite 208
Knoxville, TN 37921
865-409-4825
865-776-3836

TP:bjr

cc: J. Dowalter, Project Manager
N. Self, President

BurWil Construction Company

TABULATION OF BIDS

Project: Hamblen County Justice Center		Bid Package: Laundry Equipment		
Bidders	Laundry Systems	O'Dell	REM Laundry	
Base Bid Price:	$ 64,541.78	$ 76,767.00	$ 73,010.00	
Bid Form Included & Signed	Yes	Yes	Yes	
Receipt of Addenda Acknowledged (None)	Yes	Yes	Yes	
Executive Affidavits Attached (Exceptions Form, Anti-Collusion Statement, Iran Divestment Act)	Yes	Yes	Yes	
Taxes Included	No	No	No	
Payment & Performance Bond Included	No	No	No	
Sales Tax Required - Add if Needed	$ 6,292.82	$ 7,484.78	$ 7,118.48	
100% P&P Bond Required - Add if Needed	$ -	$ -	$ -	
Total	$ 70,834.60	$ 84,251.78	$ 80,128.48	

DRAFT

AIA® Document A151™ – 2019

Standard Form of Agreement between Owner and Vendor for Furniture, Furnishings, and Equipment (FF&E)

AGREEMENT made as of the « 10th » day of « JUNE » in the year « 2022 »
(In words, indicate day, month, and year.)

BETWEEN the Owner:
(Name, legal status, address, and other information)

«HAMBLEN COUNTY »« »
«511 WEST SECOND NORTH STREET
MORRISTOWN, TN 37814 »
« »
« »

and the Vendor:
(Name, legal status, address, and other information)

LARGE EQUIPMENT INC. d/b/a LAUNDRY SYSTEMS OF TENNESSEE
1506 WEST MEADOW COURT
SEVIERVILLE, TN 37862 »« »
« »

for the following Project:
(Name, location, and detailed description)

«HAMBLEN COUNTY JUSTICE CENTER
440 NORTH JACKSON STREET
MORRISTOWN TN 37814»
« »
« »

The Architect:
(Name, legal status, address, and other information)

«MOSELEY ARCHITECTS P.C.
6210 ARDREY KELL ROAD
THE HUB AT WAVERLY
SUITE 425
CHARLOTTE NC 28277 »« »
« »»

The Owner and Vendor agree as follows.

ADDITIONS AND DELETIONS: The author of this document has added information needed for its completion. The author may also have revised the text of the original AIA standard form. An *Additions and Deletions Report* that notes added information as well as revisions to the standard form text is available from the author and should be reviewed.

This document has important legal consequences. Consultation with an attorney is encouraged with respect to its completion or modification.

DRAFT

ELECTRONIC COPYING of any portion of this AIA® Document to another electronic file is prohibited and constitutes a violation of copyright laws as set forth in the footer of this document.

AIA Document A151™ – 2019. Copyright © 2003, 2007, and 2019 by The American Institute of Architects. All rights reserved. The "American Institute of Architects," "AIA," the AIA Logo, and "AIA Contract Documents" are registered trademarks and may not be used without permission. This draft was produced by AIA software at 13:04:23 ET on 06/09/2022 under Order No.9227095913 which expires on 10/16/2022, is not for resale, is licensed for one-time use only, and may only be used in accordance with the AIA Contract Documents® Terms of Service. To report copyright violations, e-mail copyright@aia.org.
User Notes: (1870211916)

TABLE OF ARTICLES

1 GENERAL PROVISIONS

2 CONTRACT SUM AND PAYMENTS

3 TIME

4 OWNER

5 VENDOR

6 TITLE AND RISK OF LOSS

7 DELIVERY AND INSTALLATION

8 ACCEPTANCE

9 WARRANTIES

10 ARCHITECT

11 RELATED ACTIVITIES OF OWNER OR OF SEPARATE VENDORS

12 PROTECTION OF PERSONS AND PROPERTY

13 INSURANCE

14 CLAIMS AND DISPUTES

15 ENUMERATION OF CONTRACT DOCUMENTS

ARTICLE 1 GENERAL PROVISIONS

§ 1.1 Governing Law, including the Uniform Commercial Code

This Agreement is for the sale of goods, specifically furniture, furnishings, and equipment (FF&E), and shall be governed by the law of the place where the Project is located, excluding that jurisdiction's choice of law rule and including the jurisdiction's Uniform Commercial Code (UCC) as adopted. If this Agreement conflicts with terms provided by the UCC, the Agreement shall prevail. If the parties have selected arbitration as the method of binding dispute resolution, the Federal Arbitration Act shall govern Section 14.7.

§ 1.2 The Contract Documents

The Contract Documents are enumerated in Article 15 and consist of this Agreement (including, if applicable, Supplementary and other Conditions of the Contract), Drawings, Specifications, Addenda issued prior to the execution of this Agreement, other documents listed in this Agreement, and Modifications issued after execution of this Agreement. The intent of the Contract Documents is to include all items necessary for the proper execution and completion of the Work by the Vendor. The Contract Documents are complementary, and what is required by one shall be as binding as if required by all. Performance by the Vendor shall be required to the extent consistent with the Contract Documents and reasonably inferable from them as being necessary to produce the indicated results.

§ 1.3 The Contract

The Contract Documents form the Contract for the Work. The Contract represents the entire and integrated agreement between the parties hereto and supersedes all prior proposals, offers, terms and conditions, negotiations, representations, or agreements, either written or oral. The Contract may be amended or modified only by a Modification. The Contract Documents shall not be construed to create a contractual relationship of any kind between any persons or entities other than the Owner and the Vendor. The primary purpose of the Contract is the sale of goods, and any services provided are incidental to such primary purpose.

§ 1.4 Modifications
A Modification is a written amendment to the Contract for changes in the Work signed by both parties or a written order for a minor change in the Work signed by the Architect. A minor change in the Work is a change that is consistent with the intent of the Contract Documents and does not involve an adjustment in the Contract Sum or an extension of the Contract Time.

§ 1.5 The Work
The Work means the Vendor's performance, including the sale of FF&E and any incidental fabrication, shipping, warehousing, delivery, installation, and other items or services required by the Contract Documents and provided, or to be provided, by the Vendor. The Work includes all labor, materials, temporary protection, storage, and equipment necessary to fulfill the Vendor's obligations, except as specifically indicated in the Contract Documents to be the responsibility of others. The Work may constitute the whole or a part of the Project.

§ 1.6 Instruments of Service
Instruments of Service are representations, in any medium of expression now known or later developed, of the tangible and intangible creative work performed by the Architect and the Architect's consultants under their respective professional services agreements. Instruments of Service may include, without limitation, studies, surveys, models, sketches, drawings, specifications, and other similar materials.

§ 1.7 Ownership and Use of Drawings, Specifications, and Other Instruments of Service
§ 1.7.1 The Architect and the Architect's consultants shall be deemed the authors and owners of their respective Instruments of Service, including the Drawings and Specifications, and will retain all common law, statutory, and other reserved rights in their Instruments of Service, including copyrights. The Vendor, sub-vendors, and suppliers shall not own or claim a copyright in the Instruments of Service. Submittal or distribution to meet official regulatory requirements or for other purposes in connection with the Project is not to be construed as publication in derogation of the Architect's or Architect's consultants' reserved rights.

§ 1.7.2 The Vendor, sub-vendors, and suppliers are authorized to use and reproduce the Instruments of Service provided to them, subject to the protocols established pursuant to Sections 1.8 and 1.9, solely and exclusively for execution of the Work. All copies made under this authorization shall bear the copyright notice, if any, shown on the Instruments of Service. The Vendor, sub-vendors, and suppliers may not use the Instruments of Service on other projects, or in connection with additions to this Project outside the scope of the Work without the specific written consent of the Owner, Architect, and the Architect's consultants.

§ 1.8 Digital Data Use and Transmission
The parties shall agree upon protocols governing the transmission and use of Instruments of Service or any other information or documentation in digital form. The parties will use AIA Document E203™–2013, Building Information Modeling and Digital Data Exhibit, to establish the protocols for the development, use, transmission, and exchange of digital data.

§ 1.9 Building Information Models Use and Reliance
Any use of, or reliance on, all or a portion of a building information model without agreement to protocols governing the use of, and reliance on, the information contained in the model and without having those protocols set forth in AIA Document E203™–2013, Building Information Modeling and Digital Data Exhibit, and the requisite AIA Document G202™–2013, Project Building Information Modeling Protocol Form, shall be at the using or relying party's sole risk and without liability to the other party and its vendors or consultants, the authors of, or contributors to, the building information model, and each of their agents and employees.

§ 1.10 Severability
The invalidity of any provision of the Contract Documents shall not invalidate the Contract or its remaining provisions. If it is determined that any provision of the Contract Documents violates any law, or is otherwise invalid or unenforceable, then that provision shall be revised to the extent necessary to make that provision legal and enforceable. In such case the Contract Documents shall be construed, to the fullest extent permitted by law, to give effect to the parties' intentions and purposes in executing the Contract.

§ 1.11 Notice
§ 1.11.1 Except as otherwise provided in Section 1.11.2, where the Contract Documents require one party to notify or give notice to the other party, such notice shall be provided in writing to the designated representative of the party to

whom the notice is addressed and shall be deemed to have been duly served if delivered in person, by mail, by courier, or by electronic transmission in accordance with AIA Document E203™–2013, Building Information Modeling and Digital Data Exhibit, if completed, or as otherwise set forth below:
(If other than in accordance with AIA Document E203–2013, insert requirements for delivering Notice in electronic format such as name, title, and email address of the recipient and whether and how the system will be required to generate a read receipt for the transmission.)

« »

§ 1.11.2 Notice of Claims shall be provided in writing and shall be deemed to have been duly served only if delivered to the designated representative of the party to whom the notice is addressed by certified or registered mail, or by courier providing proof of delivery.

§ 1.12 Assignment of Contract
Neither party to the Contract shall assign the Contract without written consent of the other, except that the Owner may, without consent of the Vendor, assign the Contract to a lender providing financing for the Project if the lender assumes the Owner's rights and obligations under the Contract Documents. The Vendor shall execute all consents reasonably required to facilitate such assignment.

ARTICLE 2 CONTRACT SUM AND PAYMENTS
§ 2.1 Contract Sum
§ 2.1.1 The Owner shall pay the Vendor the Contract Sum in current funds for the Vendor's performance of the Contract. The Contract Sum shall be «**SEVENTY THOUSAND EIGHT HUNDRED AND THIRTY FOUR DOLLARS AND 60/100** » (**$ «70,834.60** »), subject to additions and deductions as provided in the Contract Documents.

§ 2.1.2 Alternates
§ 2.1.2.1 Alternates, if any, included in the Contract Sum:

Item	Price

§ 2.1.2.2 Subject to the conditions noted below, the following alternates may be accepted by the Owner following execution of this Agreement. Upon acceptance, the Owner shall issue a Modification to this Agreement.
(Insert below each alternate and the conditions that must be met for the Owner to accept the alternate.)

Item	Price	Conditions for Acceptance

§ 2.1.3 Unit prices, if any:
(Identify the item and state the unit price and the quantity limitations, if any, to which the unit price will be applicable.)

Item	Units and Limitations	Price per Unit ($0.00)

§ 2.1.4 Allowances, if any, included in the Contract Sum:
(Identify each allowance.)

Item	Price

§ 2.1.5 Liquidated damages, if any:
(Insert terms and conditions for liquidated damages, if any.)

« »

§ 2.1.6 Other:
(Insert provisions for bonus or other incentives, if any, that might result in a change to the Contract Sum.)

« »

§ 2.2 Payments
§ 2.2.1 The Owner shall make payments to the Vendor in conformance with the following payment terms:
(Insert payment terms, such as payment due dates, deposit requirements, and prompt payment discounts, if any.)

«INVOICE REQUIREMENTS PER EXHIBIT C : INVITATION TO BID »

§ 2.2.2 When payment is due pursuant to the payment terms of Section 2.2.1, the Vendor shall submit to the Owner an itemized invoice, supported by data substantiating the Vendor's right to payment.

§ 2.2.3 Except with the Owner's knowledge and consent, the Vendor shall not engage in any activity, or offer any employment, interest, or contribution to the Owner's employees or consultants, that would reasonably appear to compromise the Owner's employees' or consultants' judgment with respect to this Project.

ARTICLE 3 TIME
§ 3.1 Contract Time
§ 3.1.1 Unless otherwise provided, Contract Time is the period of time, including authorized adjustments, allotted in the Contract Documents for completion of the Work. The Contract Time shall be measured from the date of commencement. The term "day" as used in the Contract Documents shall mean calendar day unless otherwise specifically defined.

§ 3.1.2 Time limits stated in the Contract Documents are of the essence of the Contract. By executing this Agreement, the Vendor confirms that the Contract Time is a reasonable period for performing the Work.

§ 3.1.3 If the Vendor is delayed at any time in the commencement or progress of the Work by (1) changes ordered in the Work; (2) labor disputes, fire, unusual delay in deliveries, abnormal adverse weather conditions not reasonably anticipatable, unavoidable casualties, or any causes beyond the Vendor's control; or (3) other causes that the Vendor asserts, and the Architect determines, justify delay, then the Contract Time shall be extended for such reasonable time as the Architect may determine, subject to the provisions of Article 14.

§ 3.1.4 If the Vendor fails to achieve completion of the Work as provided in this Article 3, liquidated damages, if any, shall be assessed as set forth in Section 2.1.5.

§ 3.2 Date of Commencement
The date of commencement of the Work shall be:
(Check one of the following boxes.)

[« »] The date of this Agreement.

[« X »] A date set forth in a notice to proceed issued by the Owner.

[« »] Established as follows:
(Insert a date or a means to determine the date of commencement of the Work.)

« »

If a date of commencement of the Work is not selected, then the date of commencement shall be the date of this Agreement.

§ 3.3 Completion
§ 3.3.1 Completion of the Work occurs upon acceptance of all FF&E in the Contract Documents in accordance with Article 8.

§ 3.3.2 Subject to adjustments of the Contract Time as provided in the Contract Documents, the Vendor shall achieve completion of the entire Work:
(Check the appropriate box and complete the necessary information.)

[« »] Not later than « » (« ») calendar days from the date of commencement of the Work.

[« X »] By the following date: «**JANUARY 31, 2024** »

§ 3.3.3 Subject to adjustments of the Contract Time as provided in the Contract Documents, if portions of the Work are to be completed prior to completion of the entire Work, the Vendor shall achieve completion of such portions by the following dates:

Portion of Work	Completion Date

ARTICLE 4 OWNER

§ 4.1 The Owner's Representative

The Owner shall identify a representative authorized to act on behalf of the Owner with respect to the Project. The Owner's representative shall not be changed without ten days' prior notice to the Vendor. The Owner identifies the following representative:
(Name, address, email address, and other information)

«**BILL BRITTAIN** »
HAMBLEN COUNTY MAYOR
511 WEST SECOND NORTH STREET
MORRISTOWN TN 37814 » »

§ 4.2 Information and Services Required of the Owner

§ 4.2.1 The Owner shall retain an architect lawfully licensed to practice architecture, or an entity lawfully practicing architecture, in the jurisdiction where the Project is located. That person or entity is identified as the Architect in the Agreement and is referred to throughout the Contract Documents as if singular in number.

§ 4.2.2 Unless otherwise provided in the Contract Documents, the Owner shall provide

.1 areas of the Project premises that the Vendor may use to perform the Work;
.2 access to the Project premises for the Vendor at reasonable times;
.3 information regarding any restrictions on the use of, or access to, the Project premises;
.4 suitable space for receipt, inspection, acceptance, and staging of materials and FF&E;
.5 utilities and facilities on the Project premises and vertical transportation necessary for progress and execution of the Work; and
.6 a secured premises for storage of FF&E until acceptance.

§ 4.2.3 The Owner shall furnish information or services required of the Owner by the Contract Documents with reasonable promptness. The Owner shall furnish any other information or services under the Owner's control and relevant to the Vendor's performance of the Work with reasonable promptness after receiving the Vendor's written request for such information or services.

ARTICLE 5 VENDOR

§ 5.1 The Vendor's Representative

The Vendor shall identify a representative authorized to act on behalf of the Vendor with respect to the Project. The Vendor's representative shall not be changed without ten days' prior notice to the Owner and Architect. The Vendor identifies the following representative:
(Name, address, email address, and other information)

«**LLOYD SMITH**
LARGE EQUIPMENT INC. d/b/a LAUNDRY EQUIPMENT SYSTEMS OF TN
1506 WEST MEADOW COURT
SEVIERVILLE, TN 37862 »
« »

§ 5.2 The Vendor shall not be relieved of its obligations to perform the Work in accordance with the Contract Documents by activities or duties of the Architect in the Architect's administration of the Contract.

§ 5.3 The Vendor shall coordinate its Work with the work provided by the Owner and the Owner's other vendors, consultants, and contractors. The Vendor may communicate with the Owner's other vendors, consultants, and contractors, for the purposes of completing the Work. The Vendor shall keep the Owner reasonably informed of any such communications. The Vendor shall be entitled to rely on the accuracy and completeness of work and information furnished by the Owner and the Owner's other vendors, consultants, and contractors. The Vendor shall provide prompt written notice to the Owner if the Vendor becomes aware of any error, omission, or inconsistency in such work or information.

§ 5.4 Review of Contract Documents and Inspection of Project Premises by Vendor

§ 5.4.1 Execution of the Contract by the Vendor is a representation that the Vendor has visited the Project premises, if required in the Contract Documents, and correlated personal observations with requirements of the Contract Documents.

§ 5.4.2 Before starting each portion of the Work, including placing orders for FF&E, the Vendor shall (1) carefully study and compare the various Contract Documents relative to that portion of the Work, as well as the information furnished by the Owner pursuant to Section 4.2; (2) visit and inspect the Project premises in order to gain an understanding of the conditions under which the Work is to be performed; (3) determine availability of facilities for access, delivery, transportation, and staging; (4) determine any restrictions imposed by the Owner and the Owner's separate vendors and contractors; and (5) correlate observations with the requirements of the Contract Documents. The Vendor shall promptly report to the Owner and Architect conditions observed that would impede the Vendor's performance of the Work. The Vendor's obligations to review the Contract Documents are for the purpose of facilitating delivery and installation by the Vendor and are not for the purpose of discovering errors, omissions, or inconsistencies in the Contract Documents; however, the Vendor shall promptly report to the Architect any errors, inconsistencies, or omissions discovered by or made known to the Vendor as a request for information in such form as the Architect may require. It is recognized that the Vendor's review is made in the Vendor's capacity as a vendor and not as a licensed design professional, unless otherwise specifically provided for in the Contract Documents.

§ 5.4.3 The Vendor is not required to ascertain that the Contract Documents are in accordance with applicable laws, statutes, ordinances, codes, rules and regulations, or lawful orders of public authorities, but the Vendor shall promptly report to the Architect any nonconformity discovered by or made known to the Vendor as a request for information in such form as the Architect may require.

§ 5.4.4 If the Vendor believes that additional cost or time is involved because of clarifications or instructions the Architect issues in response to the Vendor's notices or requests for information pursuant to Sections 5.4.2 or 5.4.3, the Vendor shall submit Claims as provided in Article 14. If the Vendor fails to perform the obligations of Sections 5.4.2 or 5.4.3, the Vendor shall pay such costs and damages to the Owner, subject to Section 14.12, as would have been avoided if the Vendor had performed such obligations. If the Vendor performs those obligations, the Vendor shall not be liable to the Owner or Architect for damages resulting from errors, inconsistencies, or omissions in the Contract Documents, for differences between field measurements or conditions and the Contract Documents, or for nonconformities of the Contract Documents to applicable laws, statutes, ordinances, codes, rules and regulations, and lawful orders of public authorities.

§ 5.5 Supervision

§ 5.5.1 The Vendor shall supervise and direct the Work using the Vendor's best skill and attention. The Vendor shall be solely responsible for and have control over the means, methods, techniques, sequences, and procedures of fabrication, shipment, delivery, and installation, and for coordinating all portions of the Work under the Contract, unless the Contract Documents give other specific instructions concerning these matters.

§ 5.5.2 The Vendor shall be responsible to the Owner for acts and omissions of the Vendor's employees, sub-vendors, and their agents and employees, and other persons or entities performing portions of the Work for or on behalf of the Vendor or any of its sub-vendors.

§ 5.5.3 The Vendor shall be responsible for inspection of portions of the Work already performed to determine that such portions are in proper condition for subsequent Work.

§ 5.6 Labor and Materials

§ 5.6.1 Unless otherwise provided in the Contract Documents, the Vendor shall provide and pay for labor, materials, tools, installation equipment and machinery, delivery, and other facilities and services necessary for proper execution and completion of the Work whether temporary or permanent and whether or not incorporated or to be incorporated in the Work.

§ 5.6.2 The Vendor shall enforce strict discipline and good order among the Vendor's employees and other persons carrying out the Work. The Vendor shall not permit employment of unfit persons or persons not skilled in tasks assigned to them.

§ 5.6.3 The Vendor shall make no substitution or change in the Contract Documents unless done in accordance with a Modification, and after providing the Architect notice and a reasonable opportunity to evaluate the proposed substitution or change and consult with the Owner.

§ 5.7 Taxes

The Vendor shall pay sales, consumer, use, and other similar taxes that are legally enacted when quotes are received or negotiations concluded, whether or not yet effective or merely scheduled to go into effect.

§ 5.8 Permits, Fees, Notices, and Compliance with Laws

§ 5.8.1 Unless otherwise provided in the Contract Documents, the Vendor shall secure and pay for permits, fees, licenses, and inspections by government agencies necessary for proper execution and completion of the Work that are customarily secured after execution of the Contract and legally required at the time bids are received or negotiations concluded.

§ 5.8.2 The Vendor shall comply with and give notices required by applicable laws, statutes, ordinances, codes, rules and regulations, and lawful orders of public authorities applicable to performance of the Work. If the Vendor performs Work knowing it to be contrary to applicable laws, statutes, ordinances, codes, rules and regulations, or lawful orders of public authorities, the Vendor shall assume appropriate responsibility for such Work and shall bear the costs attributable to correction.

§ 5.9 Allowances

The Vendor shall include in the Contract Sum all allowances stated in the Contract Documents. The Owner shall select items under allowances with reasonable promptness. Allowance amounts shall include the costs to the Vendor of items delivered at the Project premises and all required taxes, less applicable trade discounts. Vendor's costs for unloading and handling at the Project premises, labor, installation, overhead, profit, and other expenses contemplated for stated allowance amounts shall be included in the Contract Sum but not in the allowance. Whenever costs are more than or less than allowances, the Contract Sum shall be adjusted accordingly by Modification. The amount of the Modification shall reflect the difference between actual costs and the allowances under Section 2.1.4.

§ 5.10 Vendor's Schedules

§ 5.10.1 The Vendor, promptly after being awarded the Contract, shall submit for the Owner's and Architect's information a progress schedule for the Work. The schedule shall not exceed time limits current under the Contract Documents, shall be revised at appropriate intervals as required by the progress of the Work and Project, shall be related to the entire Project, and shall provide for expeditious and practicable execution of the Work.

§ 5.10.2 The Vendor shall perform the Work in general accordance with the most recent schedule submitted to the Owner and Architect.

§ 5.10.3 The Vendor's progress schedule shall indicate dates for commencement and completion of phases of the Work within the Contract Time, including dates for order placement, fabrication, shipping, delivery, and installation. The schedule shall indicate other critical dates, such as deadlines for approval of submittals of colors, finishes, and materials. The Vendor shall obtain and submit for the Owner's and the Architect's information written confirmation from sub-vendors of dates of fabrication and delivery.

§ 5.10.4 The Vendor shall cooperate with the Owner and Architect in coordinating the Vendor's progress schedule with those of contractors and separate vendors and with the requirements of the Owner and Architect. The Vendor shall cooperate in determining mutually acceptable dates and times for delivery, installation, and inspection of the Work, and

use of services and facilities provided to the Vendor, all to be confirmed in writing within a reasonable time in advance of such dates and times.

§ 5.11 Submittals

§ 5.11.1 The Vendor shall review for compliance with the Contract Documents and submit to the Architect shop drawings, product data, samples, and similar submittals required by the Contract Documents in coordination with the Vendor's progress schedule and in such sequence as to allow the Architect reasonable time for review. These submittals shall be submitted by the time determined in **EXHIBIT C : INVITATION TO BID.**. By submitting shop drawings, product data, samples, and similar submittals, the Vendor represents to the Owner and Architect that the Vendor has (1) reviewed and approved them; (2) determined and verified materials, field measurements, and field installation criteria related thereto, or will do so; and (3) checked and coordinated the information contained within such submittals with the requirements of the Work and of the Contract Documents. The Work shall be in accordance with approved submittals. Shop drawings, product data, samples and similar submittals are not Contract Documents.

§ 5.11.2 The Vendor shall provide the Owner with available manufacturer's warranty documents, product data, and material safety data sheets.

§ 5.12 Cleaning Up

The Vendor shall keep the Project premises and surrounding area free from accumulation of waste materials and rubbish caused by operations under the Contract. At completion of the Work, the Vendor shall remove waste materials, rubbish, the Vendor's tools, construction equipment, machinery, and surplus material from and about the Project.

§ 5.13 Access to Work

The Vendor shall provide the Owner and Architect with reasonable access to the Work in preparation and progress wherever located.

§ 5.14 Indemnification

§ 5.14.1 To the fullest extent permitted by law, the Vendor shall indemnify and hold harmless the Owner, Architect, Architect's consultants, and agents and employees of any of them from and against claims, damages, losses and expenses, including but not limited to attorneys' fees, arising out of or resulting from performance of the Work, provided that such claim, damage, loss, or expense is attributable to bodily injury, sickness, disease or death, or to injury to or destruction of tangible property (other than the Work itself), but only to the extent caused by the negligent acts or omissions of the Vendor, a sub-vendor, anyone directly or indirectly employed by them, or anyone for whose acts they may be liable, regardless of whether or not such claim, damage, loss, or expense is caused in part by a party indemnified hereunder. Such obligation shall not be construed to negate, abridge, or reduce other rights or obligations of indemnity which would otherwise exist as to a party or person described in this Section 5.14.1.

§ 5.14.2 In claims against any person or entity indemnified under Section 5.14.1 by an employee of the Vendor, a sub-vendor, anyone directly or indirectly employed by them, or anyone for whose acts they may be liable, the indemnification obligation under Section 5.14.1 shall not be limited by a limitation on amount or type of damages, compensation, or benefits payable by or for the Vendor or sub-vendor under workers' compensation acts, disability benefit acts, or other employee benefit acts.

§ 5.14.3 Provided the Owner has fulfilled its payment obligations under the Contract Documents, the Vendor shall defend and indemnify the Owner from all loss, liability, damage or expense, including reasonable attorney's fees and litigation expenses, arising out of any lien claim or other claim for payment by any sub-vendor or supplier of any tier. Upon receipt of notice of a lien claim or other claim for payment, the Owner shall notify the Vendor. If approved by the applicable court, when required, the Vendor may substitute a surety bond for the property against which the lien or other claim for payment has been asserted.

ARTICLE 6 TITLE AND RISK OF LOSS

§ 6.1 Title to all FF&E shall be transferred to the Owner upon acceptance in accordance with Article 8.

§ 6.2 The risk of loss with respect to all FF&E provided by the Vendor shall remain with the Vendor, and the Owner has no obligation to insure such FF&E, until acceptance in accordance with Article 8.

ARTICLE 7 DELIVERY AND INSTALLATION

§ 7.1 The Vendor shall deliver FF&E in accordance with the Vendor's progress schedule, or at a time agreed upon by the Owner and Architect, and in accordance with Article 5.

§ 7.2 Delivery and installation of all FF&E shall be made at the Project premises unless otherwise specified in the Contract Documents.

§ 7.3 The Vendor shall coordinate with the Owner regarding the logistics of the Vendor's delivery and installation obligations at the Project premises.

ARTICLE 8 ACCEPTANCE

§ 8.1 The Owner and Architect may conduct a preliminary inspection of FF&E within seven days after its delivery to the Project premises for the purpose of verifying the delivery and quantities. Preliminary inspections shall not constitute acceptance of, taking charge over, or taking control of, such FF&E. The Architect shall report to the Vendor any defects, damage, deficiencies, or nonconformity observed during the preliminary inspection.

§ 8.2 When the Vendor considers the Work, or a portion thereof which the Owner agrees to accept separately, to be complete, the Vendor shall notify the Owner and Architect. The Vendor shall allow the Owner and Architect a reasonable amount of time to inspect the FF&E to determine, based on conformance with the Contract Documents, if it is accepted or rejected in whole or in part. Based on the Architect's recommendation to the Owner and the Owner's own inspection, if any, the Owner shall accept or reject the FF&E, in whole or in part.

§ 8.3 If the Owner rejects any of the FF&E, the Owner, or the Architect acting on behalf of the Owner, shall notify the Vendor within seven days of the date of inspection, specifying the basis for such rejection. Upon rejection, the Vendor shall provide a remedy and evidence of arrangements to accomplish such remedy. The Owner shall allow the Vendor a reasonable amount of time to remedy the rejected FF&E. When the Vendor considers the remedied FF&E to be complete, the parties shall follow the procedures set forth in Section 8.2. If the Owner rejects any of the FF&E for a second time, the Owner shall promptly notify the Vendor and the Vendor shall promptly remove the rejected FF&E from the Project premises and refund payments made for such rejected goods to the Owner. If the Vendor disagrees with an Owner's rejection, the Vendor may make a claim.

§ 8.4 FF&E not inspected in accordance with Section 8.2 or rejected in accordance with Section 8.3 shall be deemed accepted.

§ 8.5 The Owner's acceptance under this Article 8 cannot be revoked; however, the provisions of this Article 8 do not preclude recovery of damages as provided by law. The Owner's acceptance, or failure to discover a Vendor's breach after acceptance, shall not bar the Owner from making claims in accordance with Article 14 or from remedies and damages due to the Vendor's breach of this Agreement, including the Vendor's breach of warranties in Article 9.

ARTICLE 9 WARRANTIES

§ 9.1 The Vendor warrants to the Owner that the FF&E furnished under the Contract will be of good quality and new unless the Contract Documents require or permit otherwise. The Vendor further warrants that the FF&E will conform to the requirements of the Contract Documents. FF&E not conforming to these requirements may be considered defective. The Vendor's warranty excludes remedy for damage or defect caused by abuse, alterations to the FF&E not executed by the Vendor, improper or insufficient maintenance, improper operation, or normal wear and tear and normal usage.

§ 9.2 The Vendor assigns to the Owner all FF&E manufacturers' warranties and guarantees upon acceptance in accordance with Article 8.

§ 9.3 The Vendor hereby provides to the Owner all warranties relating to the FF&E implied by law, including the warranty of merchantability and warranty of fitness for a particular purpose.

§ 9.4 The Vendor acknowledges that no exclusion of, or limitation on, warranties contained in any proposal, product literature, or other submittal shall affect the warranties provided in this Article 9.

ARTICLE 10 ARCHITECT

§ 10.1 The Architect will provide administration of the Contract as described in the Contract Documents and will be an Owner's representative during the Vendor's performance, and until completion, of the Work. The Architect will have

authority to act on behalf of the Owner only to the extent provided in the Contract Documents, unless otherwise modified in writing in accordance with other provisions of the Contract.

§ 10.2 Except as otherwise provided in the Contract Documents or when direct communications have been specially authorized, the Owner and Vendor shall endeavor to communicate with each other through the Architect about matters arising out of or relating to the Contract. Communications by and with the Architect's consultants shall be through the Architect. Communications by and with sub-vendors and suppliers shall be through the Vendor. Communications by and with separate vendors shall be through the Owner. The Contract Documents may specify other communication protocols.

§ 10.3 The Architect will assist the Owner in coordinating schedules for fabrication, delivery, and installation of the Work, but will not be responsible for failure of the Vendor or a sub-vendor to meet schedules for completion or to perform their respective duties and responsibilities in conformance with applicable schedules.

§ 10.4 The Architect will visit the Project premises at intervals appropriate to the stage of the Work, or as otherwise agreed with the Owner, to become generally familiar with, and to keep the Owner informed about, the progress and quality of the portion of the Work completed, and to determine, in general, if the Work observed is being performed in a manner indicating that the Work, when fully completed, will be in accordance with the Contract Documents. The Architect will not have control over, charge of, or responsibility for, the means, methods, techniques, sequences, or procedures of fabrication, shipment, delivery, storage, or installation, or for the safety precautions and programs in connection with the Work, as these are solely the Vendor's rights and responsibilities under the Contract Documents.

§ 10.5 The Architect may order minor changes in the Work. The Architect's order for minor changes shall be in writing. If the Vendor believes that the proposed minor change in the Work will affect the Contract Sum or Contract Time, the Vendor shall notify the Architect and shall not proceed to implement the change in the Work. If the Vendor performs the Work set forth in the Architect's order for a minor change without prior notice to the Architect that such change will affect the Contract Sum or Contract Time, the Vendor waives any adjustment to the Contract Sum or extension of the Contract Time.

§ 10.6 The Architect will conduct inspections of FF&E and provide recommendations as set forth in Article 8. Pursuant to Article 8, the Architect is only responsible for identifying defects, deficiencies, or nonconformities that the Architect actually observes, or reasonably should observe, during its inspections. The Architect is not required to make exhaustive or continuous inspections to fulfill its responsibilities in Article 8 and has no responsibility to discover latent defects.

§ 10.7 The Architect will review and approve or take other appropriate action upon the Vendor's submittals such as shop drawings, product data, and samples, but only for the limited purpose of checking for conformance with information given and the design concept expressed in the Contract Documents.

ARTICLE 11 RELATED ACTIVITIES OF OWNER OR OF SEPARATE VENDORS

§ 11.1 The Owner shall coordinate the activities of the Owner's own forces and of each separate vendor or contractor, if any, with the Work.

§ 11.2 If the Work depends for proper execution or results upon activities by the Owner or a separate vendor or contractor, the Vendor shall, prior to proceeding with that portion of the Work, promptly report to the Owner and Architect apparent discrepancies or defects in, or arising from, the activities of the Owner or separate vendors or contractors, that would impede the Vendor in achieving proper execution and results. If the Vendor fails to report reasonably discoverable discrepancies or defects, it shall be responsible for deficiencies or defects in its Work due to such deficiencies or defects.

§ 11.3 The Vendor shall reimburse the Owner for costs the Owner incurs that are payable to a separate vendor or contractor because of the Vendor's delays, improperly timed activities, or damage to the work of a separate vendor or contractor. The Owner shall be responsible to the Vendor for costs the Vendor incurs because of the delays, improperly timed activities, or damage to the Work caused by a separate vendor or contractor.

§ 11.4 If a dispute arises among the Vendor, separate vendors, or contractors, and the Owner as to the responsibility under their respective contracts for maintaining the Project premises and surrounding area free from waste materials and rubbish, the Owner may clean up and the Architect will allocate the cost among those responsible.

ARTICLE 12 PROTECTION OF PERSONS AND PROPERTY

§ 12.1 Safety Precautions and Programs

The Vendor shall be responsible for initiating, maintaining, and supervising all safety precautions and programs in connection with the performance of the Contract. The Vendor shall take reasonable precautions for safety of, and shall provide reasonable protection to prevent damage, injury, or loss to

.1 employees on the Work and other persons who may be affected thereby;

.2 the Work, and materials and FF&E to be incorporated therein, whether in storage on or off the Project premises, under care, custody, or control of the Vendor or sub-vendors; and

.3 other property at the Project premises or adjacent thereto.

The Vendor shall comply with, and give notices required by, applicable laws, statutes, ordinances, codes, rules and regulations, and lawful orders of public authorities bearing on safety of persons and property and their protection from damage, injury, or loss. The Vendor shall promptly remedy damage and loss to property caused in whole or in part by the Vendor, sub-vendors, or anyone directly or indirectly employed by any of them, or by anyone for whose acts they may be liable and for which the Vendor is responsible under Sections 12.1.2 and 12.1.3. The Vendor may make a claim for the cost to remedy the damage or loss to the extent such damage or loss is attributable to acts or omissions of the Owner or Architect, or of anyone for whose acts either of them may be liable, and not attributable to the fault or negligence of the Vendor. The foregoing obligations of the Vendor are in addition to the Vendor's obligations under Section 5.14.

§ 12.2 Hazardous Materials and Substances

§ 12.2.1 The Vendor is responsible for compliance with the requirements of the Contract Documents regarding hazardous materials or substances. If the Vendor encounters a hazardous material or substance not addressed in the Contract Documents, and if reasonable precautions will be inadequate to prevent foreseeable bodily injury or death to persons resulting from a material or substance, including but not limited to asbestos or polychlorinated biphenyl (PCB), encountered on the Project premises by the Vendor, the Vendor shall, upon recognizing the condition, immediately stop Work in the affected area and notify the Owner and Architect of the condition. When the material or substance has been rendered harmless, Work in the affected area shall resume upon written agreement of the Owner and Vendor. By written agreement between the Owner and Vendor, the Contract Time shall be extended appropriately, and the Contract Sum shall be increased in the amount of the Vendor's reasonable additional costs of shutdown, delay, and start-up.

§ 12.2.2 To the fullest extent permitted by law, the Owner shall indemnify and hold harmless the Vendor, sub-vendors, Architect, Architect's consultants, and agents and employees of any of them from and against claims, damages, losses, and expenses, including but not limited to attorneys' fees, arising out of or resulting from performance of the Work in the affected area, if in fact, the material or substance presents the risk of bodily injury or death as described in Section 12.2.1 and has not been rendered harmless, provided that such claim, damage, loss, or expense is attributable to bodily injury, sickness, disease or death, or to injury to or destruction of tangible property (other than the Work itself), except to the extent that such damage, loss, or expense is due to the fault or negligence of the party seeking indemnity.

§ 12.2.3 If, without negligence on the part of the Vendor, the Vendor is held liable by a government agency for the cost of remediation of a hazardous material or substance solely by reason of performing Work as required by the Contract Documents, the Owner shall indemnify the Vendor for all cost and expense thereby incurred.

ARTICLE 13 INSURANCE

§ 13.1 The Vendor shall purchase and maintain insurance of the types and limits of liability, containing the endorsements, and subject to the terms and conditions, as described in this Article 13 or elsewhere in the Contract Documents. The Vendor shall purchase and maintain the insurance required by this Agreement from an insurance company or insurance companies lawfully authorized to issue insurance in the jurisdiction where the Project is located. The Vendor shall maintain the required insurance from the date of commencement of the Work to the date of completion of the Work, unless a different duration is stated below.

§ 13.2 Commercial General Liability insurance for the Project written on an occurrence form with policy limits of not less than «**One Million Dollars** » (**$ «1,000,000.00** ») each occurrence, «**Four Million Dollars** » (**$ «4,000,000.00** ») general aggregate, and «**Four Million Dollars** » **($ «4,000,000.00** ») aggregate for products-completed operations hazard, providing coverage for claims including

.1 damages because of bodily injury, sickness or disease, including occupational sickness or disease, and death of any person;

.2 personal and advertising injury;

.3 damages because of physical damage to or destruction of tangible property, including the loss of use of such property;
.4 bodily injury or property damage arising out of completed operations; and
.5 the Vendor's indemnity obligations under Section 5.14.

§ 13.3 Automobile Liability covering vehicles owned by the Vendor and non-owned vehicles used by the Vendor, with policy limits of not less than «**Two Million Dollars** » (**$ «2,000,000.00** ») per accident, for bodily injury, death of any person, and property damage arising out of the ownership, maintenance, and use of those motor vehicles along with any other statutorily required automobile coverage.

§ 13.4 The Vendor may achieve the required limits and coverage for Commercial General Liability and Automobile Liability through a combination of primary and excess or umbrella liability insurance, provided such primary and excess or umbrella insurance policies result in the same or greater coverage as those required under Sections 13.2 and 13.3, and in no event shall any excess or umbrella liability insurance provide narrower coverage than the primary policy. The excess policy shall not require the exhaustion of the underlying limits only through the actual payment by the underlying insurers.

§ 13.5 Workers' Compensation at statutory limits.

§ 13.6 Employers' Liability with policy limits not less than «**One Million Dollars** » ($ «**1,000.000.00** ») each accident, «**One Million Dollars** » **($ «1,000,000.00** ») each employee, and «**One Million Dollars** » ($ «**1,000,000.00** ») policy limit.

§ 13.7 If the Vendor is required to furnish professional services as part of the Work, the Vendor shall procure Professional Liability insurance covering performance of the professional services, with policy limits of not less than « ($ « ») per claim and « » ($ «) in the aggregate. **N/A**

§ 13.8 The Vendor shall provide certificates of insurance acceptable to the Owner evidencing compliance with the requirements in this Article 13 at the following times: (1) prior to commencement of the Work; (2) upon renewal or replacement of each required policy of insurance; and (3) upon the Owner's written request. An additional certificate evidencing continuation of liability coverage, including coverage for completed operations, shall be submitted with the final invoice and thereafter upon renewal or replacement of such coverage until the expiration of the period required by Section 13.1. The certificates will show the Owner as an additional insured on the Vendor's Commercial General Liability and excess or umbrella liability policy.

§ 13.9 The Vendor shall disclose to the Owner any deductible or self- insured retentions applicable to any insurance required to be provided by the Vendor.

§ 13.10 To the fullest extent permitted by law, the Vendor shall cause the commercial liability coverage required by this Article 13 to include (1) the Owner, the Architect, and the Architect's Consultants as additional insureds for claims caused in whole or in part by the Vendor's negligent acts or omissions during the Vendor's operations; and (2) the Owner as an additional insured for claims caused in whole or in part by the Vendor's negligent acts or omissions for which loss occurs during completed operations. The additional insured coverage shall be primary and non-contributory to any of the Owner's general liability insurance policies and shall apply to both ongoing and completed operations. To the extent commercially available, the additional insured coverage shall be no less than that provided by Insurance Services Office, Inc. (ISO) forms CG 20 10 07 04, CG 20 37 07 04, and, with respect to the Architect and the Architect's Consultants, CG 20 32 07 04.

§ 13.11 Within three (3) business days of the date the Vendor becomes aware of an impending or actual cancellation or expiration of any insurance required by this Article 13, the Vendor shall provide notice to the Owner of such impending or actual cancellation or expiration. Upon receipt of notice from the Vendor, the Owner shall, unless the lapse in coverage arises from an act or omission of the Owner, have the right to stop the Work until the lapse in coverage has been cured by the procurement of replacement coverage by the Vendor. The furnishing of notice by the Vendor shall not relieve the Vendor of any contractual obligation to provide any required coverage.

§ 13.12 Other Insurance Provided by the Vendor
(List below any other insurance coverage to be provided by the Vendor and any applicable limits.)

Coverage	Limits
N/A	

§ 13.13 Waiver of Subrogation

§ 13.13.1 The Owner and Vendor waive all rights against (1) each other and any of their sub-vendors, agents, and employees, each of the other; (2) the Architect and Architect's consultants; and (3) separate vendors or contractors, if any, and any of their sub-vendors, subcontractors, sub-subcontractors, agents, and employees, for damages caused by fire, or other causes of loss, to the extent those losses are covered by property insurance required by this Agreement or other property insurance applicable to the Project, except such rights as they have to proceeds of such insurance. The Owner or Vendor, as appropriate, shall require similar written waivers in favor of the individuals and entities identified above from the Architect, Architect's consultants, separate vendors and contractors, and sub-vendors, subcontractors, and sub-subcontractors. The policies of insurance purchased and maintained by each person or entity agreeing to waive claims pursuant to this Section 13.13.1 shall not prohibit this waiver of subrogation. This waiver of subrogation shall be effective as to a person or entity (1) even though that person or entity would otherwise have a duty of indemnification, contractual, or otherwise, (2) even though that person or entity did not pay the insurance premium directly or indirectly, or (3) whether or not the person or entity had an insurable interest in the damaged property.

§ 13.13.2 A loss insured under the Owner's property insurance shall be adjusted by the Owner as fiduciary and made payable to the Owner as fiduciary for the insureds, as their interests may appear, subject to requirements of any applicable mortgagee clause. The Owner shall pay the Architect and Vendor their just shares of insurance proceeds received by the Owner, and by appropriate agreements, written where legally required for validity, the Architect and Vendor shall make payments to their consultants and sub-vendors in similar manner.

ARTICLE 14 CLAIMS AND DISPUTES

§ 14.1 Binding Dispute Resolution

For any claim subject to, but not resolved by, mediation pursuant to Section 14.6, the method of binding dispute resolution shall be as follows:
(Check the appropriate box.)

[« »] Arbitration pursuant to Section 14.7 of this Agreement

[«X »] Litigation in a court of competent jurisdiction

[« »] Other *(Specify)*

« »

If the Owner and Vendor do not select a method of binding dispute resolution, or do not subsequently agree in writing to a binding dispute resolution method other than litigation, claims will be resolved in a court of competent jurisdiction.

§ 14.2 Claims, disputes, and other matters in question arising out of or relating to this Contract, including those alleging an error or omission by the Architect but excluding those arising under Section 12.2, shall be referred initially to the Architect for decision. Such matters, except those waived as provided for in Section 14.12, shall, after initial decision by the Architect or 30 days after submission of the matter to the Architect, be subject to mediation as a condition precedent to binding dispute resolution.

§ 14.3 Notice of Claims

Claims by either the Owner or Vendor shall be initiated by notice to the other party in accordance with Section 1.11.2.

§ 14.4 Time Limits on Claims

The Owner and Vendor shall commence all claims and causes of action against the other and arising out of or related to the Contract in accordance with the requirements of the final dispute resolution method selected in this Agreement, whether in contract, tort, breach of warranty, or otherwise, within the period specified by applicable law, but in any case not more than 10 years after the date of completion of the Work. The Owner and Vendor waive all claims and causes of action not commenced in accordance with this Section 14.4.

§ 14.5 If a claim, dispute, or other matter in question relates to or is the subject of a mechanic's lien, the party asserting such matter may proceed in accordance with applicable law to comply with the lien procedures, including notice or filing deadlines.

§ 14.6 The parties shall endeavor to resolve their disputes by mediation which, unless the parties mutually agree otherwise, shall be administered by the American Arbitration Association in accordance with their Construction Industry Mediation Procedures in effect on the date of this Agreement. A request for mediation shall be made in writing, delivered to the other party to this Agreement, and filed with the person or entity administering the mediation. The request may be made concurrently with the binding dispute resolution proceedings but, in such event, mediation shall proceed in advance of binding dispute resolution proceedings, which shall be stayed pending mediation for a period of 60 days from the date of filing, unless stayed for a longer period by agreement of the parties or court order. If an arbitration is stayed pursuant to this Section, the parties may nonetheless proceed to the selection of the arbitrator(s) and agree upon a schedule for later proceedings.

§ 14.7 If the parties have selected arbitration as the method for binding dispute resolution in this Agreement, any claim, subject to, but not resolved by, mediation shall be subject to arbitration which, unless the parties mutually agree otherwise, shall be administered by the American Arbitration Association, in accordance with the Construction Industry Arbitration Rules in effect on the date of this Agreement. Demand for arbitration shall be made in writing, delivered to the other party to the Contract, and filed with the person or entity administering the arbitration. The award rendered by the arbitrator or arbitrators shall be final, and judgment may be entered upon it in accordance with applicable law in any court having jurisdiction thereof.

§ 14.8 Subject to the rules of the American Arbitration Association or other applicable arbitration rules, either party, at its sole discretion, may consolidate an arbitration conducted under this Agreement with any other arbitration to which it is a party provided that (1) the arbitration agreement governing the other arbitration permits consolidation; (2) the arbitrations to be consolidated substantially involve common questions of law or fact; and (3) the arbitrations employ materially similar procedural rules and methods for selecting arbitrator(s).

§ 14.9 Subject to the rules of the American Arbitration Association or other applicable arbitration rules, any party to an arbitration may include by joinder persons or entities substantially involved in a common question of law or fact whose presence is required if complete relief is to be accorded in arbitration provided that the party sought to be joined consents in writing to such joinder. Consent to arbitration involving an additional person or entity shall not constitute consent to arbitration of a Claim not described in the written Consent.

§ 14.10 The foregoing agreement to arbitrate and other agreements to arbitrate with an additional person or entity duly consented to by parties to this Agreement shall be specifically enforceable under applicable law in any court having jurisdiction thereof.

§ 14.11 Continuing Contract Performance

Pending final resolution of a Claim, except as otherwise agreed in writing, the Vendor shall proceed diligently with performance of the Contract and the Owner shall continue to make payments in accordance with the Contract Documents.

§ 14.12 Waiver of Claims for Consequential Damages

The Vendor and Owner waive claims against each other for consequential damages arising out of or relating to this Contract. This mutual waiver includes

- .1 damages incurred by the Owner for rental expenses, for losses of use, income, profit, financing, business and reputation, and for loss of management or employee productivity or of the services of such persons; and
- .2 damages incurred by the Vendor for principal office expenses including the compensation of personnel stationed there, for losses of financing, business, and reputation, and for loss of profit except anticipated profit arising directly from the Work.

This mutual waiver is applicable, without limitation, to all consequential damages. Nothing contained in this Section 14.12 shall be deemed to preclude an assessment of liquidated damages, when applicable, in accordance with the requirements of the Contract Documents.

ARTICLE 15 ENUMERATION OF CONTRACT DOCUMENTS

§ 15.1 The Contract Documents are defined in Article 1 and, except for Modifications issued after execution of this Agreement, are enumerated in the sections below.

§ 15.2 The Agreement is this executed AIA Document A151™–2019, Standard Form of Agreement Between Owner and Vendor for Furniture, Furnishings, and Equipment.

§ 15.3 AIA Document E203™–2013, Building Information Modeling and Digital Data Exhibit, dated as indicated below:
(Insert the date of the E203–2013 incorporated into this Agreement.)

« »

§ 15.4 The Specifications:
(Either list the Specifications here or refer to an exhibit attached to this Agreement.)

«SEE EXHIBIT A, DRAWING LOG & SPECIFICATIONS »

Section	Title	Date	Pages

§ 15.5 The Drawings:
(Either list the Drawings here or refer to an exhibit attached to this Agreement.)

« SEE EXHIBIT A, DRAWING LOG & SPECIFICATIONS »

Number	Title	Date

§ 15.6 The Addenda, if any:

Number	Date	Pages

Portions of Addenda relating to quotations or proposal requirements are not part of the Contract Documents unless the quotation or proposal requirements are enumerated in this Article 15.

§ 15.7 Additional documents, if any, forming part of the Contract Documents:

.1 Other Exhibits:
(Check all boxes that apply.)

[« »] The Sustainability Plan:

Title	Date	Pages

[« »] Supplementary and other Conditions of the Contract:

Document	Title	Date	Pages

.2 Other documents, if any, listed below:
(List here any additional documents that are intended to form part of the Contract Documents.)

«EXHIBIT A DRAWING LOG/SPECIFICATIONS
EXHIBIT B VENDOR BID FORM
EXHIBIT C INVITATION TO BID»

This Agreement entered into as of the day and year first written above.

OWNER *(Signature)*	VENDOR *(Signature)*
« BILL BRITTAIN, HAMBLEN COUNTY MAYOR	« »« »
(Printed name and title)	*(Printed name and title)*

Sheet Name	Description	Date Issued
A0.1	GENERAL ARCHITECTURAL INFORMATION	10/1/2021 0:00
A0.2	WALL/PARTITION TYPES, WALL JOINTS AND TERMINATIONS	10/1/2021 0:00
A1.1	ARCHITECTURAL SITE PLAN	10/1/2021 0:00
A1.2	ARCHITECTURAL SITE DETAILS	10/1/2021 0:00
A1.3	ARCHITECTURAL SITE DETAILS	10/1/2021 0:00
A10.1	OVERALL ROOF PLAN	10/1/2021 0:00
A2.0.0	OVERALL FLOOR PLAN- LEVEL0	10/1/2021 0:00
A2.0.1	OVERALL FLOOR PLAN- LEVEL1 AND 1M	10/1/2021 0:00
A2.0.2	OVERALL FLOOR PLAN- LEVEL2 AND 2M	10/1/2021 0:00
A2.0.3	OVERALL FLOOR PLAN- LEVEL3 AND 3M	10/1/2021 0:00
A2.0.3a	OVERALL FLOOR PLAN- LEVEL3- ALTERNATE	10/1/2021 0:00
A2.0A	FLOOR PLAN- LEVEL0- PARTA	10/1/2021 0:00
A2.0Ad	FLOOR PLAN- LEVEL0- PARTA DIMENSIONS	10/1/2021 0:00
A2.0B	FLOOR PLAN- LEVEL0- PARTB	10/1/2021 0:00
A2.0Bd	FLOOR PLAN- LEVEL0- PARTB DIMENSIONS	10/1/2021 0:00
A2.1A	FLOOR PLAN- LEVEL1- PARTA	10/1/2021 0:00
A2.1AM	MEZZANINE FLOOR PLAN- LEVEL1- PARTA	10/1/2021 0:00
A2.1AMd	MEZZANINE FLOOR PLAN- LEVEL1- PARTA DIMENSIONS	10/1/2021 0:00
A2.1Ad	FLOOR PLAN- LEVEL1- PART A DIMENSIONS	4/11/2022 0:00
A2.1B	FLOOR PLAN- LEVEL1- PARTB	10/1/2021 0:00
A2.1BM	MEZZANINE FLOOR PLAN- LEVEL1- PARTB	10/1/2021 0:00
A2.1BMd	MEZZANINE FLOOR PLAN- LEVEL1-	10/1/2021 0:00
A2.1Bd	FLOOR PLAN- LEVEL1- PARTB DIMENSIONS	10/1/2021 0:00
A2.1C	FLOOR PLAN- LEVEL1- PARTC	10/1/2021 0:00
A2.1Cd	FLOOR PLAN- LEVEL1- PARTC DIMENSIONS	10/1/2021 0:00
A2.1D	FLOOR PLAN- LEVEL1- PARTD	10/1/2021 0:00
A2.1Dd	FLOOR PLAN- LEVEL1- PARTD DIMENSIONS	10/1/2021 0:00
A2.2A	FLOOR PLAN- LEVEL2- PARTA	10/1/2021 0:00
A2.2AM	MEZZANINE FLOOR PLAN- LEVEL2- PARTA	10/1/2021 0:00
A2.2B	FLOOR PLAN- LEVEL2- PARTB	10/1/2021 0:00
A2.2BM	MEZZANINE FLOOR PLAN- LEVEL2- PARTB	10/1/2021 0:00
A2.3A	FLOOR PLAN- LEVEL3- PARTA	10/1/2021 0:00
A2.3AM	MEZZANINE FLOOR PLAN- LEVEL 3M- PARTA	10/1/2021 0:00
A2.3AMa	MEZZANINE FLOOR PLAN- LEVEL 3M- PARTA - ALTERNATE	10/1/2021 0:00
A2.3AMd	MEZZANINE FLOOR PLAN- LEVEL 3M- PARTA DIMENSIONS	10/1/2021 0:00
A2.3Aa	FLOOR PLAN- LEVEL3 ALTERNATE	10/1/2021 0:00
A2.3Ad	FLOOR PLAN- LEVEL3- PARTA DIMENSIONS	10/1/2021 0:00
A2.3B	FLOOR PLAN- LEVEL3- PARTB	10/1/2021 0:00
A2.3BM	MEZZANINE FLOOR PLAN- LEVEL 3M- PARTB	10/1/2021 0:00
A2.3BMa	MEZZANINE FLOOR PLAN- LEVEL 3M- PARTB ALTERNATE	10/1/2021 0:00
A2.3BMd	MEZZANINE FLOOR PLAN- LEVEL 3M- PARTB DIMENSIONS	10/1/2021 0:00
A2.3Ba	FLOOR PLAN- LEVEL3 ALTERNATE	10/1/2021 0:00
A2.3Bd	FLOOR PLAN- LEVEL3- PARTB DIMENSIONS	10/1/2021 0:00
A2.4.1	CONTROL ROOM FLOOR PLANS AND ENLARGED PLANS	10/1/2021 0:00
A2.5.1	PLAN DETAILS	10/1/2021 0:00
A3.0.1	FINISH SCHEDULE- LEVEL 0,1& 1M- PARTSA&B	10/1/2021 0:00
A3.0.2	FINISH SCHEDULE- LEVEL1- PARTSC&D	10/1/2021 0:00
A3.0.3	FINISH SCHEDULE- LEVELS 2, 2M,3 AND 3M	10/1/2021 0:00
A3.0.4	FINISH SCHEDULE- LEVEL3 ALTERNATES	10/1/2021 0:00
A3.0.5	FINISH PATTERN PLAN- PARTC	10/1/2021 0:00
A3.0.6	FINISH PATTERN PLAN- PARTD AND PARTIAL PARTB	10/1/2021 0:00

Return to Committee Cover

Sheet Name	Description	Date Issued
A3.0.7	INTERIOR SIGNAGE	10/1/2021 0:00
A3.1.1	DOOR AND FRAME SCHEDULE	10/1/2021 0:00
A3.1.2	DOOR, FRAME AND GLAZING TYPES	10/1/2021 0:00
A3.2.1	DOOR AND FRAME DETAILS	10/1/2021 0:00
A3.2.2	WINDOW FRAME DETAILS	10/1/2021 0:00
A3.3.1	DETENTION DOOR SCHEDULE	10/1/2021 0:00
A3.3.2	DETENTION WINDOW SCHEDULE, DOOR& FRAME TYPES	10/1/2021 0:00
A3.4.1	DETENTION DOOR AND FRAME DETAILS	10/1/2021 0:00
A4.1.1	BUILDING ELEVATIONS	10/1/2021 0:00
A4.1.2	BUILDING ELEVATIONS	10/1/2021 0:00
A4.1.3	BUILDING ELEVATIONS	10/1/2021 0:00
A4.1.4	BUILDING ELEVATIONS	10/1/2021 0:00
A4.2.1	INTERIOR ELEVATIONS	10/1/2021 0:00
A4.2.2	INTERIOR ELEVATIONS	10/1/2021 0:00
A4.2.3	INTERIOR ELEVATIONS	10/1/2021 0:00
A4.2.4	INTERIOR ELEVATIONS	10/1/2021 0:00
A4.2.5		10/1/2021 0:00
A5.0.1	BUILDING SECTIONS	10/1/2021 0:00
A5.0.2	BUILDING SECTIONS	10/1/2021 0:00
A5.0.3	BUILDING SECTIONS	10/1/2021 0:00
A5.1.0	WALL SECTIONS	10/1/2021 0:00
A5.1.1	WALL SECTIONS	10/1/2021 0:00
A5.1.2	WALL SECTIONS	10/1/2021 0:00
A5.1.3	WALL SECTIONS	10/1/2021 0:00
A5.1.4	WALL SECTIONS	10/1/2021 0:00
A5.1.5	WALL SECTIONS	10/1/2021 0:00
A5.1.6	WALL SECTIONS	10/1/2021 0:00
A5.1.7	WALL SECTIONS	10/1/2021 0:00
A5.1.8	WALL SECTIONS	10/1/2021 0:00
A5.1.9	WALL SECTIONS	10/1/2021 0:00
A5.2.1	SECTION DETAILS	10/1/2021 0:00
A5.2.2	SECTION DETAILS	10/1/2021 0:00
A5.2.3	SECTION DETAILS	10/1/2021 0:00
A5.2.4	SECTION DETAILS	10/1/2021 0:00
A5.2.5	SECTION DETAILS	10/1/2021 0:00
A5.2.6	SECTION DETAILS	10/1/2021 0:00
A5.2.7	SECTION DETAILS	10/1/2021 0:00
A5.2.8	PRECAST PROFILES	10/1/2021 0:00
A6.1.1	ENLARGED STAIR PLANS& DETAILS	10/1/2021 0:00
A6.1.2	ENLARGED STAIR PLANS& DETAILS	10/1/2021 0:00
A6.1.3	ENLARGED STAIR PLANS& DETAILS	10/1/2021 0:00
A6.1.4	ENLARGED STAIR PLANS& DETAILS	10/1/2021 0:00
A6.1.5	ENLARGED STAIR PLANS& DETAILS	10/1/2021 0:00
A6.2.1	ENLARGED ELEVATOR PLANS	4/7/2022 0:00
A7.1.1	TOILET ASSEMBLIES, SCHEDULE AND ENLARGED PLANS	10/1/2021 0:00
A7.1.2	TOILET ASSEMBLIES, SCHEDULE AND ENLARGED PLANS	10/1/2021 0:00
A7.2.1	ENLARGED PLANS	10/1/2021 0:00
A7.2.2	ENLARGED PLANS	10/1/2021 0:00
A7.2.3	DETENTION EQUIPMENT DETAILS	10/1/2021 0:00
A7.2.4	DETENTION EQUIPMENT DETAILS	10/1/2021 0:00
A7.3.1	ENLARGED PLAN& ELEVATIONS COURTROOMB	10/1/2021 0:00

Return to Committee Cover

Sheet Name	Description	Date Issued
A7.3.2	ENLARGED PLAN& ELEVATIONS COURTROOMC	10/1/2021 0:00
A7.4.1	ENLARGED FLOOR PLANS- MEDICAL	10/1/2021 0:00
A7.5.1	ENLARGED PLANS- PUBLIC ENTRY	10/1/2021 0:00
A8.1.1	CASEWORK AND ELEVATIONS	10/1/2021 0:00
A8.1.2	CASEWORK AND ELEVATIONS	10/1/2021 0:00
A8.2.1	COURTROOM CASEWORK ELEVATIONS, SECTIONS,& DETAILS	10/1/2021 0:00
A8.2.2	COURTROOM CASEWORK ELEVATIONS, SECTIONS,& DETAILS	10/1/2021 0:00
A8.2.3	COURTROOM CASEWORK ELEVATIONS, SECTIONS,& DETAILS	10/1/2021 0:00
A8.2.4	WOOD TRIM DETAILS	10/1/2021 0:00
A9.0A	REFLECTED CEILING PLAN LEVEL0 - PARTA	10/1/2021 0:00
A9.0B	REFLECTED CEILING PLAN LEVEL0 - PARTB	10/1/2021 0:00
A9.1A	REFLECTED CEILING PLAN LEVEL1 - PARTA	10/1/2021 0:00
A9.1AM	REFLECTED CEILING PLAN LEVEL 1M - PARTA	10/1/2021 0:00
A9.1B	REFLECTED CEILING PLAN LEVEL1 - PARTB	10/1/2021 0:00
A9.1BM	REFLECTED CEILING PLAN LEVEL 1M - PARTB	10/1/2021 0:00
A9.1C	REFLECTED CEILING PLAN LEVEL1 - PARTC	10/1/2021 0:00
A9.1D	REFLECTED CEILING PLAN LEVEL1	10/1/2021 0:00
A9.2A	REFLECTED CEILING PLAN LEVEL2 - PARTA	10/1/2021 0:00
A9.2AM	REFLECTED CEILING PLAN LEVEL 2M	10/1/2021 0:00
A9.2B	REFLECTED CEILING PLAN LEVEL2 - PARTB	10/1/2021 0:00
A9.2BM	REFLECTED CEILING PLAN LEVEL 2M - PARTB	10/1/2021 0:00
A9.3A	REFLECTED CEILING PLAN LEVEL3	10/1/2021 0:00
A9.3AM	REFLECTED CEILING PLAN LEVEL 3M - PARTA	10/1/2021 0:00
A9.3AMa	REFLECTED CEILING PLAN LEVEL 3M -ALTERNATE	10/1/2021 0:00
A9.3Aa	REFLECTED CEILING PLAN LEVEL3 - ALTERNATE	10/1/2021 0:00
A9.3B	REFLECTED CEILING PLAN LEVEL3	10/1/2021 0:00
A9.3BM	REFLECTED CEILING PLAN LEVEL 3M - PARTB	10/1/2021 0:00
A9.3BMa	REFLECTED CEILING PLAN- LEVEL 3M -ALTERNATE	10/1/2021 0:00
A9.3Ba	REFLECTED CEILING PLAN- LEVEL3 -ALTERNATE	10/1/2021 0:00
A9.4.1	REFLECTED CEILING DETAILS	10/1/2021 0:00
C0.0		10/1/2021 0:00
C0.1	GENERAL NOTES AND STANDARD SYMBOLS	10/1/2021 0:00
C0.2	EXISTING CONDITIONS	10/1/2021 0:00
C0.3	SITE DEMOLITION PLAN	10/1/2021 0:00
C0.4	UTILITIES DEMOLITION PLAN	10/1/2021 0:00
C0.5	PROPOSED PROPERTY LAYOUT	10/1/2021 0:00
C0VER		10/1/2021 0:00
C0VER - Vol II		10/1/2021 0:00
C0VER-Vol II		8/30/2021 0:00
C0VER_Vol II		9/27/2021 0:00
C1.0	SITE LAYOUT PLAN	10/1/2021 0:00
C1.1	SITE LAYOUT INSETS	10/1/2021 0:00
C2.0	GRADING PLAN	10/1/2021 0:00
C2.1	SITE GRADING AND DRAINAGE PLAN INSETS	10/1/2021 0:00
C2.2	SITE GRADING AND DRAINAGE PLAN INSETS	10/1/2021 0:00
C2.3	STORMWATER PLAN	10/1/2021 0:00
C2.4	EROSION CONTROL PLAN- INITIAL	10/1/2021 0:00
C2.5	EROSION CONTROL PLAN- INTERMEDIATE	10/1/2021 0:00
C2.6	EROSION CONTROL PLAN- FINAL	10/1/2021 0:00
C2.7	HELEN ROSS MCNABB DEMOLITION PLAN	10/1/2021 0:00
C2.8	HELEN ROSS MCNABB IMPROVEMENTS	10/1/2021 0:00

Return to Committee Cover

Sheet Name	Description	Date Issued
C2.9	427 N. JACKSON STREET PAVING EXHIBIT	10/1/2021 0:00
C3.0	WATER AND GAS PLAN	10/1/2021 0:00
C3.1	SEWER LINEA PLAN AND PROFILE, STA 10+00 TO 12+10	10/1/2021 0:00
C3.2	SEWER LINEA PLAN AND PROFILE, STA 12+10 TO 17+59	10/1/2021 0:00
C3.3	SEWER LINEB PLAN AND PROFILE	10/1/2021 0:00
C4.0	LANDSCAPE PLAN	10/1/2021 0:00
C5.0	STANDARD SITE DETAILS	10/1/2021 0:00
C5.1	STANDARD SITE DETAILS	10/1/2021 0:00
C5.10	UTILITY DETAILS	10/1/2021 0:00
C5.11	UTILITY DETAILS	10/1/2021 0:00
C5.12	UTILITY DETAILS	10/1/2021 0:00
C5.13	RETAINING WALLS	10/1/2021 0:00
C5.14	RETAINING WALLS	10/1/2021 0:00
C5.15	RETAINING WALLS	10/1/2021 0:00
C5.16	RETAINING WALLS	10/1/2021 0:00
C5.17	RETAINING WALLS	10/1/2021 0:00
C5.2	STANDARD SITE DETAILS	10/1/2021 0:00
C5.3	STANDARD SITE DETAILS	10/1/2021 0:00
C5.4	STORM DRAINAGE DETAILS	10/1/2021 0:00
C5.5	STORM DRAINAGE DETAILS	10/1/2021 0:00
C5.6	EROSION CONTROL DETAILS	10/1/2021 0:00
C5.7	EROSION CONTROL DETAILS	10/1/2021 0:00
C5.8	UTILITY DETAILS	10/1/2021 0:00
C5.9	UTILITY DETAILS	10/1/2021 0:00
CE0.1	ABBREVIATION, LEGEND, AND GENERAL NOTES	10/1/2021 0:00
CE0.2	ELECTRICAL UTILITY EXISTING CONDITIONS	10/1/2021 0:00
CE1.0	ELECTRICAL UTILITY SITE LAYOUT PLAN	10/1/2021 0:00
CE2.0	ELECTRICAL SITE LIGHTING AND PUMP STATION PLAN	10/1/2021 0:00
CE2.1	ELECTRICAL SITE VISUAL LIGHTING PLAN	10/1/2021 0:00
CE5.0	ELECTRICAL DETAILS AND SCHEDULES	10/1/2021 0:00
E0.1	LEGENDS, ABBREVIATIONS AND GENERAL NOTES	10/1/2021 0:00
E1.1	ELECTRICAL SITE PLAN	10/1/2021 0:00
E2.0A.1	FLOOR PLAN- LEVEL0- PARTA- LIGHTING	10/1/2021 0:00
E2.0A.2	FLOOR PLAN- LEVEL0- PARTA- POWER	10/1/2021 0:00
E2.0A.3	FLOOR PLAN- LEVEL0- PARTA- COMMUNICATIONS	10/1/2021 0:00
E2.0A.4	FLOOR PLAN- LEVEL0- PARTA- MECHANICAL POWER	10/1/2021 0:00
E2.0B.1	FLOOR PLAN- LEVEL0- PARTB- LIGHTING	10/1/2021 0:00
E2.0B.2	FLOOR PLAN- LEVEL0- PARTB- POWER	10/1/2021 0:00
E2.0B.3	FLOOR PLAN- LEVEL0- PARTB- COMMUNICATIONS	10/1/2021 0:00
E2.0B.4	FLOOR PLAN- LEVEL0- PARTB- MECHANICAL POWER	10/1/2021 0:00
E2.1A.1	FLOOR PLAN- LEVEL1- PARTA- LIGHTING	10/1/2021 0:00
E2.1A.2	FLOOR PLAN- LEVEL1- PARTA- POWER	10/1/2021 0:00
E2.1A.3	FLOOR PLAN- LEVEL1- PARTA- COMMUNICATIONS	10/1/2021 0:00
E2.1A.4	FLOOR PLAN- LEVEL1- PARTA- MECHANICAL POWER	10/1/2021 0:00
E2.1AM.1	FLOOR PLAN- LEVEL 1M- PARTA- LIGHTING	10/1/2021 0:00
E2.1AM.2	FLOOR PLAN- LEVEL 1M- PARTA- POWER	10/1/2021 0:00
E2.1AM.3	FLOOR PLAN- LEVEL 1M- PARTA- COMMUNICATIONS	10/1/2021 0:00
E2.1B.1	FLOOR PLAN- LEVEL1- PARTB- LIGHTING	10/1/2021 0:00
E2.1B.2	FLOOR PLAN- LEVEL1- PARTB- POWER	10/1/2021 0:00
E2.1B.3	FLOOR PLAN- LEVEL1- PARTB- COMMUNICATIONS	10/1/2021 0:00
E2.1B.4	FLOOR PLAN- LEVEL1- PARTB- MECHANICAL POWER	10/1/2021 0:00

Return to Committee Cover

Sheet Name	Description	Date Issued
E2.1BM.1	FLOOR PLAN- LEVEL 1M- PARTB- LIGHTING	10/1/2021 0:00
E2.1BM.2	FLOOR PLAN- LEVEL 1M- PARTB- POWER	10/1/2021 0:00
E2.1BM.3	FLOOR PLAN- LEVEL 1M- PARTB- COMMUNICATIONS	10/1/2021 0:00
E2.1C.1	FLOOR PLAN- LEVEL1- PARTC- LIGHTING	10/1/2021 0:00
E2.1C.2	FLOOR PLAN- LEVEL1- PARTC- POWER	10/1/2021 0:00
E2.1C.3	FLOOR PLAN- LEVEL1- PARTC- COMMUNICATIONS	10/1/2021 0:00
E2.1C.4	FLOOR PLAN- LEVEL1- PARTC- MECHANICAL POWER	10/1/2021 0:00
E2.1D.1	FLOOR PLAN- LEVEL1- PARTD- LIGHTING	10/1/2021 0:00
E2.1D.2	FLOOR PLAN- LEVEL1- PARTD- POWER	10/1/2021 0:00
E2.1D.3	FLOOR PLAN- LEVEL1- PARTD- COMMUNICATIONS	10/1/2021 0:00
E2.1D.4	FLOOR PLAN- LEVEL1- PARTD- MECHANICAL POWER	10/1/2021 0:00
E2.2A.1	FLOOR PLAN- LEVEL2- PARTA- LIGHTING	10/1/2021 0:00
E2.2A.2	FLOOR PLAN- LEVEL2- PARTA- POWER	10/1/2021 0:00
E2.2A.3	FLOOR PLAN- LEVEL2- PARTA- COMMUNICATIONS	10/1/2021 0:00
E2.2A.4	FLOOR PLAN- LEVEL2- PARTA- MECHANICAL POWER	10/1/2021 0:00
E2.2AM.1	FLOOR PLAN- LEVEL 2M- PARTA- LIGHTING	10/1/2021 0:00
E2.2AM.2	FLOOR PLAN- LEVEL 2M- PARTA- POWER	10/1/2021 0:00
E2.2AM.3	FLOOR PLAN- LEVEL 2M- PARTA- COMMUNICATIONS	10/1/2021 0:00
E2.2B.1	FLOOR PLAN- LEVEL2- PARTB- LIGHTING	10/1/2021 0:00
E2.2B.2	FLOOR PLAN- LEVEL2- PARTB- POWER	10/1/2021 0:00
E2.2B.3	FLOOR PLAN- LEVEL2- PARTB- COMMUNICATIONS	10/1/2021 0:00
E2.2B.4	FLOOR PLAN- LEVEL2- PARTB- MECHANICAL POWER	10/1/2021 0:00
E2.2BM.1	FLOOR PLAN- LEVEL 2M- PARTB- LIGHTING	10/1/2021 0:00
E2.2BM.2	FLOOR PLAN- LEVEL 2M- PARTB- POWER	10/1/2021 0:00
E2.2BM.3	FLOOR PLAN- LEVEL 2M- PARTB- COMMUNICATIONS	10/1/2021 0:00
E2.3A.1	FLOOR PLAN- LEVEL3- PARTA- LIGHTING	10/1/2021 0:00
E2.3A.1a	FLOOR PLAN- LEVEL3- PARTA- LIGHTING- ALTERNATE	10/1/2021 0:00
E2.3A.2	FLOOR PLAN- LEVEL3- PARTA- POWER	10/1/2021 0:00
E2.3A.2a	FLOOR PLAN- LEVEL3- PARTA- POWER- ALTERNATE	10/1/2021 0:00
E2.3A.3	FLOOR PLAN- LEVEL3- PARTA- COMMUNICATIONS	10/1/2021 0:00
E2.3A.3a	FLOOR PLAN- LEVEL3- PARTA- COMMUNICATIONS- ALTERNATE	10/1/2021 0:00
E2.3A.4	FLOOR PLAN- LEVEL3- PARTA- MECHANICAL POWER	10/1/2021 0:00
E2.3AM.1	FLOOR PLAN- LEVEL 3M- PARTA- LIGHTING	10/1/2021 0:00
E2.3AM.1a	FLOOR PLAN- LEVEL 3M- PARTA- LIGHTING- ALTERNATE	10/1/2021 0:00
E2.3AM.2	FLOOR PLAN- LEVEL 3M- PARTA- POWER	10/1/2021 0:00
E2.3AM.2a	FLOOR PLAN- LEVEL 3M- PARTA- POWER- ALTERNATE	10/1/2021 0:00
E2.3AM.3	FLOOR PLAN- LEVEL 3M- PARTA- COMMUNICATIONS	10/1/2021 0:00
E2.3AM.3a	FLOOR PLAN- LEVEL 3M- PARTA- COMMUNICATIONS- ALTERNATE	10/1/2021 0:00
E2.3B.1	FLOOR PLAN- LEVEL3- PARTB- LIGHTING	10/1/2021 0:00
E2.3B.1a	FLOOR PLAN- LEVEL3- PARTB- LIGHTING- ALTERNATE	10/1/2021 0:00
E2.3B.2	FLOOR PLAN- LEVEL3- PARTB- POWER	10/1/2021 0:00
E2.3B.2a	FLOOR PLAN- LEVEL3- PARTB- POWER- ALTERNATE	10/1/2021 0:00
E2.3B.3	FLOOR PLAN- LEVEL3- PARTB- COMMUNICATIONS	10/1/2021 0:00
E2.3B.3a	FLOOR PLAN- LEVEL3- PARTB- COMMUNICATIONS- ALTERNATE	10/1/2021 0:00
E2.3B.4	FLOOR PLAN- LEVEL3- PARTB- MECHANICAL POWER	10/1/2021 0:00
E2.3BM.1	FLOOR PLAN- LEVEL 3M- PARTB- LIGHTING	10/1/2021 0:00
E2.3BM.1a	FLOOR PLAN- LEVEL 3M- PARTB- LIGHTING- ALTERNATE	10/1/2021 0:00
E2.3BM.2	FLOOR PLAN- LEVEL 3M- PARTB- POWER	10/1/2021 0:00
E2.3BM.2a	FLOOR PLAN- LEVEL 3M- PARTB- POWER- ALTERNATE	10/1/2021 0:00
E2.3BM.3	FLOOR PLAN- LEVEL 3M- PARTB- COMMUNICATIONS	10/1/2021 0:00
E2.3BM.3a	FLOOR PLAN- LEVEL 3M- PARTB- COMMUNICATIONS- ALTERNATE	10/1/2021 0:00

Return to Committee Cover

Sheet Name	Description	Date Issued
E2.4	ROOF PLAN- MECHANICAL POWER	10/1/2021 0:00
E4.1	DETAILS	10/1/2021 0:00
E4.2	DETAILS	10/12/2021 0:00
E4.3	SMOKE CONTROL ZONES	10/1/2021 0:00
E4.4	FIRE ALARM RISER& MATRIX	10/1/2021 0:00
E5.1	ONE-LINE DIAGRAM& SCHEDULES	10/12/2021 0:00
E5.2	SCHEDULES	10/1/2021 0:00
E5.3	NETWORK FIBER RISER DIAGRAM	10/1/2021 0:00
E5.4	PANEL BOARD SCHEDULES	10/1/2021 0:00
E5.5	PANEL BOARD SCHEDULES	10/1/2021 0:00
E5.6	PANEL BOARD SCHEDULES	10/1/2021 0:00
E5.7	PANEL BOARD SCHEDULES	10/1/2021 0:00
E5.8	PANEL BOARD SCHEDULES	10/1/2021 0:00
FP0.1	LEGENDS, ABBREVIATIONS AND GENERAL NOTES	10/1/2021 0:00
FP2.0A	FLOOR PLAN- LEVEL0- PARTA	10/1/2021 0:00
FP2.0B	FLOOR PLAN- LEVEL0- PARTB	10/1/2021 0:00
FP2.1A	FLOOR PLAN- LEVEL1- PARTA	10/1/2021 0:00
FP2.1AM	MEZZANINE FLOOR PLAN- LEVEL1- PARTA	10/1/2021 0:00
FP2.1B	FLOOR PLAN- LEVEL1- PARTB	10/1/2021 0:00
FP2.1BM	MEZZANINE FLOOR PLAN- LEVEL1- PARTB	10/1/2021 0:00
FP2.1C	FLOOR PLAN- LEVELC- PARTC	10/1/2021 0:00
FP2.1D	FLOOR PLAN- LEVEL1- PARTD	10/1/2021 0:00
FP2.2A	FLOOR PLAN- LEVEL2- PARTA	10/1/2021 0:00
FP2.2AM	MEZZANINE FLOOR PLAN- LEVEL2- PARTA	10/1/2021 0:00
FP2.2B	FLOOR PLAN- LEVEL2- PARTB	10/1/2021 0:00
FP2.2BM	MEZZANINE FLOOR PLAN- LEVEL- PARTB	10/1/2021 0:00
FP2.3A	FLOOR PLAN- LEVEL3- PARTA	10/1/2021 0:00
FP2.3AM	MEZZANINE FLOOR PLAN- LEVEL3- PARTA	10/1/2021 0:00
FP2.3B	FLOOR PLAN- LEVEL3- PARTB	10/1/2021 0:00
FP2.3BM	MEZZANINE FLOOR PLAN- LEVEL3- PARTB	10/1/2021 0:00
FS.01	FOOD SERVICE EQUIPMENT PLAN	10/1/2021 0:00
FS.02	FOOD SERVICE EQUIPMENT SCHEDULE	10/1/2021 0:00
FS.03	FOOD SERVICE PLUMBING PLAN	10/1/2021 0:00
FS.04	FOOD SERVICE ELECTRICAL PLAN	10/1/2021 0:00
FS.05	FOOD SERVICE DISHROOM DETAILS	10/1/2021 0:00
FS.06	FOOD SERVICE COLD STORAGE& EXHAUST HOOD DETAILS	10/1/2021 0:00
G1.0	SECURITY WALL PLAN- LEVEL0	10/1/2021 0:00
G1.1	SECURITY WALL PLAN- LEVEL1 AND 1M	10/1/2021 0:00
G1.2	SECURITY WALL PLAN- LEVEL2 AND 2M	10/1/2021 0:00
G1.3	SECURITY WALL PLAN- LEVEL3 AND 3M	10/1/2021 0:00
G2.1	GENERAL INFORMATION- AIR BARRIER	10/1/2021 0:00
G2.2	INTEGRATED MOCKUP PANEL	10/1/2021 0:00
I2.3AM.1a		10/1/2021 0:00
I2.3AM.2a		10/1/2021 0:00
I2.3BM.1a		10/1/2021 0:00
I2.3BM.2a		10/1/2021 0:00
LS1.0	CODE SUMMARY	10/1/2021 0:00
LS2.0	LIFE SAFETY FLOOR PLAN- LEVEL0	10/1/2021 0:00
LS2.1	LIFE SAFETY FLOOR PLAN- LEVEL1	10/1/2021 0:00
LS2.1M	LIFE SAFETY FLOOR PLAN- LEVEL 1M	10/1/2021 0:00
LS2.2	LIFE SAFETY FLOOR PLAN- LEVELS2 AND 2M	10/1/2021 0:00

Return to Committee Cover

Sheet Name	Description	Date Issued
LS2.3	LIFE SAFETY FLOOR PLAN- LEVELS3 AND 3M	10/1/2021 0:00
LS3.0	FIRE PROTECTION PLAN- LEVEL0	10/1/2021 0:00
LS3.1	FIRE PROTECTION PLAN- LEVEL1 AND 1M	10/1/2021 0:00
LS3.2	FIRE PROTECTION PLAN- LEVEL2 AND 2M	10/1/2021 0:00
LS3.3	FIRE PROTECTION PLAN- LEVEL3 AND 3M	10/1/2021 0:00
LS4.1	FIRE RESISTIVE ASSEMBLIES	10/1/2021 0:00
LS4.2	FIRE RESISTIVE ASSEMBLIES	10/1/2021 0:00
LS4.3	FIRE RESISTIVE ASSEMBLIES	10/12/2021 0:00
LS4.4	FIRE RESISTIVE ASSEMBLIES	10/1/2021 0:00
LS4.5	FIRE RESISTIVE ASSEMBLIES	10/1/2021 0:00
LS4.6	FIRE RESISTIVE ASSEMBLIES	10/1/2021 0:00
M0.1	LEGENDS, ABBREVIATIONS AND GENERAL NOTES	10/1/2021 0:00
M0.2	SCHEDULES	10/1/2021 0:00
M0.3	SCHEDULES	10/1/2021 0:00
M1.0	SITE PLAN	10/1/2021 0:00
M2.0A.1	FLOOR PLAN- LEVEL0- PARTA- DUCTWORK	10/1/2021 0:00
M2.0A.2	FLOOR PLAN- LEVEL0- PARTA- PIPING	10/1/2021 0:00
M2.0B.1	FLOOR PLAN- LEVEL0- PARTB- DUCTWORK	10/1/2021 0:00
M2.0B.2	FLOOR PLAN- LEVEL0- PARTB- PIPING	10/1/2021 0:00
M2.1A.1	FLOOR PLAN- LEVEL1- PARTA- DUCTWORK	10/1/2021 0:00
M2.1A.2	FLOOR PLAN- LEVEL1- PARTA- PIPING	10/1/2021 0:00
M2.1AM.1	FLOOR PLAN- LEVEL 1M- PARTA- DUCTWORK	10/1/2021 0:00
M2.1B.1	FLOOR PLAN- LEVEL1- PARTB- DUCTWORK	10/1/2021 0:00
M2.1B.2	FLOOR PLAN- LEVEL1- PARTB- PIPING	10/1/2021 0:00
M2.1BM.1	FLOOR PLAN- LEVEL 1M- PARTB- DUCTWORK	10/1/2021 0:00
M2.1C.1	FLOOR PLAN- LEVEL1- PARTC- DUCTWORK	10/1/2021 0:00
M2.1C.2	FLOOR PLAN- LEVEL1- PARTC- PIPING	10/1/2021 0:00
M2.1D.1	FLOOR PLAN- LEVEL1- PARTD- DUCTWORK	10/1/2021 0:00
M2.1D.2	FLOOR PLAN- LEVEL1- PARTD- PIPING	10/1/2021 0:00
M2.2A.1	FLOOR PLAN- LEVEL2- PARTA- DUCTWORK	10/1/2021 0:00
M2.2A.2	FLOOR PLAN- LEVEL2- PARTA- PIPING	10/1/2021 0:00
M2.2AM.1	FLOOR PLAN- LEVEL 2M- PARTA- DUCTWORK	10/1/2021 0:00
M2.2B.1	FLOOR PLAN- LEVEL2- PARTB- DUCTWORK	10/1/2021 0:00
M2.2B.2	FLOOR PLAN- LEVEL2- PARTB- PIPING	10/1/2021 0:00
M2.2BM.1	FLOOR PLAN- LEVEL 2M- PARTB- DUCTWORK	10/1/2021 0:00
M2.3A.1	FLOOR PLAN- LEVEL3- PARTA- DUCTWORK	10/1/2021 0:00
M2.3A.1a	FLOOR PLAN- LEVEL3- PARTA- DUCTWORK- ALTERNATE	10/1/2021 0:00
M2.3A.2	FLOOR PLAN- LEVEL3- PARTA- PIPING	10/1/2021 0:00
M2.3A.2a	FLOOR PLAN- LEVEL3- PARTA- PIPING- ALTERNATE	10/1/2021 0:00
M2.3AM.1	FLOOR PLAN- LEVEL 3M- PARTA- DUCTWORK	10/1/2021 0:00
M2.3AM.2	FLOOR PLAN- LEVEL 3M- PARTA- PIPING	10/1/2021 0:00
M2.3B.1	FLOOR PLAN- LEVEL3- PARTB- DUCTWORK	10/1/2021 0:00
M2.3B.1a	FLOOR PLAN- LEVEL3- PARTB- DUCTWORK- ALTERNATE	10/1/2021 0:00
M2.3B.2	FLOOR PLAN- LEVEL3- PARTB- PIPING	10/1/2021 0:00
M2.3B.2a	FLOOR PLAN- LEVEL3- PARTB- PIPING- ALTERNATE	10/1/2021 0:00
M2.3BM.1	FLOOR PLAN- LEVEL 3M- PARTB- DUCTWORK	10/1/2021 0:00
M2.3BM.2	FLOOR PLAN- LEVEL 3M- PARTB- PIPING	10/1/2021 0:00
M2.7	ROOF PLAN	10/1/2021 0:00
M3.1	ENLARGED PLANS	10/1/2021 0:00
M4.1	SECTIONS	10/1/2021 0:00
M5.1	DETAILS	10/1/2021 0:00

Return to Committee Cover

Sheet Name	Description	Date Issued
M5.2	DETAILS	10/1/2021 0:00
M5.3	DETAILS	10/1/2021 0:00
M5.4	ROOFTOP UNIT LAYOUT DETAILS	10/1/2021 0:00
M5.5	ROOFTOP UNIT LAYOUT DETAILS	10/1/2021 0:00
M5.6	ROOFTOP UNIT LAYOUT DETAILS	10/1/2021 0:00
M6.1	SYSTEM SCHEMATICS	10/1/2021 0:00
M7.1	CONTROLS	10/1/2021 0:00
M7.2	CONTROLS	10/1/2021 0:00
MP1.1.2	MICROPILE FOUNDATION PLAN-LEVEL0 AND LEVEL 1-PARTB	10/1/2021 0:00
MP1.11		10/1/2021 0:00
MP3.11		10/1/2021 0:00
P0.1	LEGENDS, ABBREVIATIONS AND GENERAL NOTES	10/1/2021 0:00
P2.0A	FOUNDATION PLAN- PARTA	10/1/2021 0:00
P2.0B	FOUNDATION PLAN- PARTB	10/1/2021 0:00
P2.0C		10/1/2021 0:00
P2.0D		10/1/2021 0:00
P2.1.1A	FLOOR PLAN- SANITARY- PARTA	10/1/2021 0:00
P2.1.2A	FLOOR PLAN- DOMESTIC- PARTA	10/1/2021 0:00
P2.1.3B	FLOOR PLAN- SANITARY- PARTB	10/1/2021 0:00
P2.1.4B	FLOOR PLAN- DOMESTIC- PARTB	10/1/2021 0:00
P2.2.10AM	LEVEL ONE MEZZANINE PLAN- DOMESTIC- PARTA	10/1/2021 0:00
P2.2.11BM	LEVEL ONE MEZZANINE PLAN- SANITARY- PARTB	10/1/2021 0:00
P2.2.12BM	LEVEL ONE MEZZANINE PLAN- DOMESTIC- PARTB	10/1/2021 0:00
P2.2.1A	LEVEL ONE FLOOR PLAN- SANITARY- PARTA	10/1/2021 0:00
P2.2.2A	LEVEL ONE FLOOR PLAN- DOMESTIC- PARTA	10/1/2021 0:00
P2.2.3B	LEVEL ONE FLOOR PLAN- SANITARY- PARTB	10/1/2021 0:00
P2.2.4B	LEVEL ONE FLOOR PLAN- DOMESTIC- PARTB	10/1/2021 0:00
P2.2.5C	LEVEL ONE FLOOR PLAN- SANITARY- PARTC	10/1/2021 0:00
P2.2.6C	LEVEL ONE FLOOR PLAN- DOMESTIC- PARTC	10/1/2021 0:00
P2.2.7D	LEVEL ONE FLOOR PLAN- SANITARY- PARTD	10/1/2021 0:00
P2.2.8D	LEVEL ONE FLOOR PLAN- DOMESTIC- PARTD	10/1/2021 0:00
P2.2.9AM	LEVEL ONE MEZZANINE PLAN- SANITARY- PARTA	10/1/2021 0:00
P2.3.1A	LEVEL TWO FLOOR PLAN- SANITARY- PARTA	10/1/2021 0:00
P2.3.2A	LEVEL TWO FLOOR PLAN- DOMESTIC- PARTA	10/1/2021 0:00
P2.3.3B	LEVEL TWO FLOOR PLAN- SANITARY- PARTB	10/1/2021 0:00
P2.3.4B	LEVEL TWO FLOOR PLAN- DOMESTIC- PARTB	10/1/2021 0:00
P2.3.5AM	LEVEL TWO MEZZANINE PLAN- SANITARY- PARTA	10/1/2021 0:00
P2.3.6AM	LEVEL TWO MEZZANINE PLAN- DOMESTIC- PARTA	10/1/2021 0:00
P2.3.7BM	LEVEL TWO MEZZANINE PLAN- SANITARY- PARTB	10/1/2021 0:00
P2.3.8BM	LEVEL TWO MEZZANINE PLAN- DOMESTIC- PARTB	10/1/2021 0:00
P2.4.1A	LEVEL THREE FLOOR PLAN- SANITARY- PARTA	10/1/2021 0:00
P2.4.2A	LEVEL THREE FLOOR PLAN- DOMESTIC- PARTA	10/1/2021 0:00
P2.4.3B	LEVEL THREE FLOOR PLAN- SANITARY- PARTB	10/1/2021 0:00
P2.4.4B	LEVEL THREE FLOOR PLAN- DOMESTIC- PARTB	10/1/2021 0:00
P2.4.5AM	LEVEL THREE MEZZANINE PLAN- SANITARY- PARTA	10/1/2021 0:00
P2.4.6AM	LEVEL THREE MEZZANINE PLAN- DOMESTIC- PARTA	10/1/2021 0:00
P2.4.7BM	LEVEL THREE MEZZANINE PLAN- SANITARY- PARTB	10/1/2021 0:00
P2.4.8BM	LEVEL THREE MEZZANINE PLAN- DOMESTIC- PARTB	10/1/2021 0:00
P2.5.1A	ROOF PLAN- PARTA	10/1/2021 0:00
P2.5.1B	ROOF PLAN- PARTB	10/1/2021 0:00
P2.5.1C	ROOF PLAN- PARTC	10/1/2021 0:00

Return to Committee Cover

Sheet Name	Description	Date Issued
P2.5.1D	ROOF PLAN- PARTD	10/1/2021 0:00
P3.1	ENLARGED PLAN- KITCHEN	10/1/2021 0:00
P3.10	ENLARGED PLANS AND RISERS	10/1/2021 0:00
P3.11	NATURAL GAS RISER DIAGRAM	10/1/2021 0:00
P3.12	STORM DRAIN RISER DIAGRAM	10/1/2021 0:00
P3.13	STORM DRAIN RISER DIAGRAM	10/1/2021 0:00
P3.14	STORM DRAIN RISER DIAGRAM	10/1/2021 0:00
P3.15	STORM DRAIN RISER DIAGRAM	10/1/2021 0:00
P3.16	STORM DRAIN RISER DIAGRAM	10/1/2021 0:00
P3.17	STORM DRAIN RISER DIAGRAM	10/1/2021 0:00
P3.2	RISER DIAGRAMS- KITCHEN	10/1/2021 0:00
P3.3	ENLARGED PLAN- MECHANICAL ROOMS	10/1/2021 0:00
P3.4	ENLARGED PLANS AND RISERS	10/1/2021 0:00
P3.5	ENLARGED PLANS AND RISERS	10/1/2021 0:00
P3.6	ENLARGED PLANS AND RISERS	10/1/2021 0:00
P3.7	ENLARGED PLANS AND RISERS	10/1/2021 0:00
P3.8	ENLARGED PLANS AND RISERS	10/1/2021 0:00
P3.9	ENLARGED PLANS AND RISERS	10/1/2021 0:00
P4.1	ENLARGED COMPOSITE PLAN- GENERAL POPULATION	10/1/2021 0:00
P4.2	ENLARGED COMPOSITE PLAN- SEGREGATION	10/1/2021 0:00
P4.3	ENLARGED COMPOSITE PLAN- GENERAL POPULATION	10/1/2021 0:00
P5.1	DETAILS- PLUMBING	10/1/2021 0:00
P5.2	DETAILS- PLUMBING	10/1/2021 0:00
P6.1	DRAWING WHERE SANITARY RISER IS TAGGED	10/1/2021 0:00
S0.0.1	GENERAL NOTES AND LEGENDS	10/1/2021 0:00
S0.0.2	SCHEDULE OF SPECIAL INSPECTIONS	10/1/2021 0:00
S0.0.3	WIND UPLIFT DIAGRAM	10/1/2021 0:00
S1.0.1	MAT PLAN- LEVEL0- PARTA	10/1/2021 0:00
S1.0.2	MAT PLAN- LEVEL0- PARTB	10/1/2021 0:00
S1.1.1	SLAB PLAN- LEVEL0- PARTA	10/1/2021 0:00
S1.1.2	SLAB PLAN- LEVEL0- PARTB	10/1/2021 0:00
S1.1.3	SLAB CONTROL JOINT PLAN- LEVEL0- PART A&B	10/1/2021 0:00
S2.0.1	CELL CAP SLAB PLAN- LEVEL0 PART A&B	10/1/2021 0:00
S2.1.1	FLOOR FRAMING PLAN- LEVEL1- PARTA	10/1/2021 0:00
S2.1.2	FLOOR FRAMING PLAN- LEVEL1- PARTB	10/1/2021 0:00
S2.1.3	FOUNDATION PLAN- LEVEL1- PART C	4/22/2022 0:00
S2.1.4	FOUNDATION PLAN- LEVEL1- PARTD	10/1/2021 0:00
S2.1.4A	SLAB CONTROL JOINT PLAN- LEVEL1- PART C&D	10/1/2021 0:00
S2.1.5	MEZZANINE FLOOR FRAMING PLAN- LEVEL 1M- PARTA	10/1/2021 0:00
S2.1.6	MEZZANINE FLOOR FRAMING PLAN- LEVEL 1M- PARTB	10/1/2021 0:00
S2.2.1	FLOOR FRAMING PLAN- LEVEL2- PARTA	10/1/2021 0:00
S2.2.2	FLOOR FRAMING PLAN- LEVEL2- PARTB	10/1/2021 0:00
S2.2.3	ROOF FRAMING PLAN- LEVEL2- PARTC	10/1/2021 0:00
S2.2.4	ROOF FRAMING PLAN- LEVEL2& HIGH ROOF- PARTD	10/1/2021 0:00
S2.2.5	MEZZANINE FLOOR FRAMING PLAN- LEVEL 2M- PARTA	10/1/2021 0:00
S2.2.6	MEZZANINE FLOOR FRAMING PLAN- LEVEL 2M- PARTB	10/1/2021 0:00
S2.3.1	FLOOR FRAMING PLAN- LEVEL3- PARTA	10/1/2021 0:00
S2.3.2	FLOOR FRAMING PLAN- LEVEL3- PARTB	10/1/2021 0:00
S2.3.3	MEZZANINE FLOOR FRAMING PLAN- LEVEL 3M- PARTA	10/1/2021 0:00
S2.3.3A	MEZZANINE FRAMING PLAN - LEVEL 3M- PARTA- ALTERNATE	10/1/2021 0:00
S2.3.4	MEZZANINE FLOOR FRAMING PLAN- LEVEL 3M- PARTB	10/1/2021 0:00

Return to Committee Cover

Sheet Name	Description	Date Issued
S2.3.4A	MEZZANINE FRAMING PLAN- LEVEL 3M- PARTB- ALTERNATE	10/1/2021 0:00
S2.4.1	ROOF FRAMING PLAN- PARTA	10/1/2021 0:00
S2.4.2	ROOF FRAMING PLAN- PARTB	10/1/2021 0:00
S3.0.1	TYPICAL FOUNDATION DETAILS	10/1/2021 0:00
S3.0.2	TYPICAL SLAB DETAILS	10/1/2021 0:00
S3.0.3	TYPICAL FOUNDATION AND CONCRETE WALL DETAILS	10/1/2021 0:00
S3.1.1	FOUNDATION SECTIONS	10/1/2021 0:00
S3.1.2	FOUNDATION SECTIONS	10/1/2021 0:00
S3.1.3	FOUNDATION SECTIONS	10/1/2021 0:00
S3.1.4	FOUNDATION SECTIONS	10/1/2021 0:00
S3.1.5	FOUNDATION SECTIONS	10/1/2021 0:00
S3.1.6	FOUNDATION SECTIONS	10/1/2021 0:00
S3.2.1	PILE CAP DETAILS	10/1/2021 0:00
S4.0.1	TYPICAL MASONRY WALL AND LINTEL DETAILS	10/1/2021 0:00
S4.0.2	TYPICAL FRAMING DETAILS	10/1/2021 0:00
S4.1.1	FRAMING SECTIONS	10/1/2021 0:00
S4.1.2	FRAMING SECTIONS	10/1/2021 0:00
S4.1.3	FRAMING SECTIONS	10/1/2021 0:00
S4.1.4	FRAMING SECTIONS	10/1/2021 0:00
S4.1.5	FRAMING SECTIONS PCO-013	3/30/2022 0:00
S4.1.6	FRAMING SECTIONS	10/1/2021 0:00
S4.1.7	FRAMING SECTIONS	4/22/2022 0:00
S5.1.1	BRACING DETAILS	10/1/2021 0:00
S6.1.1	WALL ELEVATIONS	10/1/2021 0:00
S6.1.2	WALL ELEVATIONS	10/1/2021 0:00
S6.1.3	WALL ELEVATIONS	10/1/2021 0:00
SE2.0A	SECURITY- FLOOR PLAN- LEVEL0-	10/1/2021 0:00
SE2.0B	SECURITY- FLOOR PLAN- LEVEL0-	10/1/2021 0:00
SE2.1A	SECURITY- FLOOR PLAN- LEVEL1-	10/1/2021 0:00
SE2.1AM	SECURITY- MEZZANINE FLOOR PLAN- LEVEL1-	10/1/2021 0:00
SE2.1B	SECURITY- FLOOR PLAN- LEVEL1-	10/1/2021 0:00
SE2.1BM	SECURITY- MEZZANINE FLOOR PLAN- LEVEL1-	10/1/2021 0:00
SE2.1C	SECURITY- FLOOR PLAN- LEVEL1-	10/1/2021 0:00
SE2.1D	SECURITY- FLOOR PLAN- LEVEL1-	10/1/2021 0:00
SE2.2A	SECURITY- FLOOR PLAN- LEVEL2-	10/1/2021 0:00
SE2.2AM	SECURITY- MEZZANINE FLOOR PLAN- LEVEL2-	10/1/2021 0:00
SE2.2B	SECURITY- FLOOR PLAN- LEVEL2-	10/1/2021 0:00
SE2.2BM	SECURITY- MEZZANINE FLOOR PLAN- LEVEL2-	10/1/2021 0:00
SE2.3A	SECURITY- FLOOR PLAN- LEVEL3-	10/1/2021 0:00
SE2.3AM	SECURITY- MEZZANINE FLOOR PLAN- LEVEL3-	10/1/2021 0:00
SE2.3AMa	SECURITY- MEZZANINE FLOOR PLAN- LEVEL3- ALTERNATE	10/1/2021 0:00
SE2.3Aa	SECURITY- FLOOR PLAN- LEVEL3-	10/1/2021 0:00
SE2.3B	SECURITY- FLOOR PLAN- LEVEL3-	10/1/2021 0:00
SE2.3BM	SECURITY- MEZZANINE FLOOR PLAN- LEVEL3-	10/1/2021 0:00
SE2.3BMa	SECURITY- MEZZANINE FLOOR PLAN- LEVEL3- ALTERNATE	10/1/2021 0:00
SE2.3Ba	SECURITY- FLOOR PLAN- LEVEL3-	10/1/2021 0:00
SE3.1	CAMERA SCHEDULE AND DETAILS	10/1/2021 0:00
SE4.0	SECURITY ELECTRONICS- ONE LINE DIAGRAMS	10/1/2021 0:00
SF50	LS2.0	10/12/2021 0:00
SN1.1.1	SOIL NAIL PLAN	10/1/2021 0:00
SN3.1.1	SOIL NAIL PLAN DETAILS	10/1/2021 0:00

Return to Committee Cover

Sheet Name	Description	Date Issued
TA-001		10/1/2021 0:00
TA-002		10/1/2021 0:00
TA-003		10/1/2021 0:00
TA-101		10/1/2021 0:00
TA-102		10/1/2021 0:00
TA-103		10/1/2021 0:00
TA-201		10/1/2021 0:00
TA-301		10/1/2021 0:00
TA-400		10/1/2021 0:00
TA-401		10/1/2021 0:00
TA-402		10/1/2021 0:00
TA-403		10/1/2021 0:00
TA-501		10/1/2021 0:00
TA-601		10/1/2021 0:00
TA-701		10/1/2021 0:00
TA-702		10/1/2021 0:00

Return to Committee Cover

DIVISION 00 BIDDING AND CONTRACTUAL REQUIREMENTS

001000	Advertisement to Bid
001116	Invitation to Bid
002100	Instructions to Bidders (AIA Document A701, 1997 edition)
004100	Bid Form
004313	Bid Bond (AIA Document A310, 2010 edition)
004324	Bid Envelope Cover
004325	Substitution Request Form (Prior to Bidding)
004519	Non-Collusion Affidavit of Prime Bidder
004579	Iran Divestment Act Affidavit
004580	Drug-Free Workplace Affidavit
005213	Standard Form of Agreement Between Owner and Contractor (AIA Document A101, 2007 edition)
006113	Performance Bond (AIA Document A312, 2010 edition)
006113	Payment Bond (AIA Document A312, 2010 edition)
007200	General Conditions of the Contract for Construction (AIA Document A201, 2007 edition)

Prebid Question Form: (Use on-line form. To access form go to www.moseleyarchitects.com, "Bidding", "Submit a Question").
Geotechnical Report: (Available by request. Follow the "Submit a Question" procedure above to request a copy).

SPECIFICATIONS

VOLUME 1

DIVISION 1 – GENERAL REQUIREMENTS

011000	Summary
012100	Allowances
012200	Unit Prices
012300	Alternates
012500	Substitution Procedures
012600	Contract Modification Procedures
012900	Payment Procedures
013100	Project Management and Coordination
013200	Construction Progress Documentation
013300	Submittal Procedures
014000	Quality Requirements
014200	References
014520	Testing, Adjusting, and Balancing
015000	Temporary Facilities and Controls
016000	Product Requirements
017300	Execution
017419	Construction Waste Management and Disposal

017700 Closeout Procedures
017823 Operation and Maintenance Data
017839 Project Record Documents
018119 Indoor Air Quality Requirements
018316 NFPA 285 Exterior Wall Assembly Requirements
018317 Exterior Enclosure Air Barrier Requirements
018318 Air Barrier System Pre-Installation Conference Guide
019113 General Commissioning Requirements

DIVISION 2 – EXISTING CONDITIONS

022000 Earthwork
022120 Borrow
022130 Waste Material Disposal
022210 Unclassified Excavation
022410 Subgrade
024116 Demolition
024119 Selective Demolition
027200 Drainage Materials
027221 Minor Drainage Structures
029310 Seeding, Fertilizing and Mulching
029330 Jute Thatching

DIVISION 3 – CONCRETE

033000 Cast-In-Place Concrete
033100 Sealed and Polished Concrete Floor Finish
034100 Precast Structural Concrete

DIVISION 4 – MASONRY

042000 Unit Masonry

DIVISION 5 – METALS

051200 Structural Steel Framing
052100 Steel Joist Framing
053100 Steel Decking
054000 Cold Formed Steel Framing
055000 Metal Fabrications
055100 Metal Stairs
055213 Pipe and Tube Railings
055300 Metal Gratings
055963 Detention Enclosures
057500 Decorative Formed Metal

DIVISION 6 – WOOD PLASTICS AND COMPOSITES

061000 Rough Carpentry
061600 Sheathing

064023 Interior Architectural Woodwork

DIVISION 7 – THERMAL AND MOISTURE PROTECTION

071326 Self-Adhering Sheet Waterproofing
072100 Thermal Insulation
072727 Sprayed Polyurethane Foam Air Barrier
074113 Metal Roof Panels
074216 Insulated Core Metal Panels
075423 Thermoplastic Polyolefin (TPO) Roofing
076201 Flashing, Sheet Metal and Roofing Accessories
078100 Applied Fireproofing
078123 Intumescent Mastic Fireproofing
078413 Penetration Firestopping
078426 Thermal Barriers for Plastics
078443 Joint Firestopping
079200 Joint Sealants
079500 Expansion Control

DIVISION 8 – OPENINGS

081113 Steel Doors and Frames
081416 Flush Wood Doors
081433 Stile and Rail Wood Doors
083113 Access Doors and Frames
083313 Overhead Coiling Counter Shutters
083323 Overhead Coiling Doors
084000 Aluminum Entrances, Storefront and Curtain Wall
085653 Fixed Transaction Security Windows
087100 Door Hardware
088000 Glazing
088300 Mirrors
088733 Decorative Window Film
089000 Louvers and Vents

DIVISION 9 – FINISHES

092216 Cold Formed Steel Framing - Non-Structural
092900 Gypsum Board
093000 Tiling
095113 Acoustical Panel Ceilings
095753 Security Ceiling Assemblies
096513 Resilient Base and Accessories
096516 Vinyl Sheet Floor Covering
096519 Resilient Floor Tile
096623 Resinous Matrix Terrazzo Flooring
096723 Resinous Flooring and Wall Systems

097713 Stretched Fabric Wall Systems
098414 Cementitious Wood Fiber Acoustic Panels
099100 Painting
099400 Decorative Finishes

DIVISION 10 – SPECIALTIES
101100 Visual Display Surfaces
101400 Signage
102113 Solid-Polymer Toilet Compartments
102113.14 Stainless Steel Compartments
102600 Wall and Door Protection
102800 Toilet and Bath Accessories
104400 Fire-Protection Specialties
105113.13 Metal Evidence Lockers
107300 Protective Covers
107500 Flagpoles
108113 Bird Control

DIVISION 11 – EQUIPMENT
111300 Loading Dock Equipment
111413 Pedestrian Gates
111900 Detention Equipment
111910 Custom / Security Hollow Metal Work
111950 Security Glass and Glazing
111960 Security Hardware
114000 Foodservice Equipment

DIVISION 12 – FURNISHINGS
122413 Manual Roller Window Shades
122414 Motorized Roller Window Shades
126113 Fixed Upholstery Jury Seating

DIVISION 13 – SPECIAL CONSTRUCTION
134263.16 Steel Detention Cell Modules

DIVISION 14 – CONVEYING SYSTEMS
142100 Electric Traction Machine-Roomless Elevators
144219 Courtroom Platform Lifts

VOLUME 2

DIVISION 21 – FIRE SUPPRESSION
210500 Common Work Results for Fire-Suppression
211000 Water-Based Fire-Suppression Systems

DIVISION 22 – PLUMBING

220500 Common Work Results for Plumbing
220513 Common Motor Requirements for Plumbing Equipment
220519 Meters and Gages for Plumbing Piping
220523 General-Duty Valves for Plumbing Piping
220529 Hangers and Supports for Plumbing Piping and Equipment
220553 Identification for Plumbing Piping and Equipment
220700 Plumbing Insulation
220800 Commissioning of Plumbing Systems
221113 Facility Natural Gas Piping
221116 Domestic Water Piping
221119 Domestic Water Piping Specialties
221123 Domestic Water Pumps
221316 Sanitary Waste and Vent Piping
221319 Sanitary Waste Piping Specialties
221413 Facility Storm Drainage Piping
221423 Storm Drainage Piping Specialties
221429 Sump Pumps
223400 Fuel Fired Domestic Water Heaters
224200 Plumbing Fixtures
224500 Emergency Plumbing Fixtures
224600 Security Plumbing Fixtures

DIVISION 23 – MECHANICAL

230500 Common Work Results for HVAC
230513 Motors for HVAC Equipment
230514 Variable Speed Drives
230517 Sleeves and Sleeve Seals for HVAC Piping
230519 Meters and Gages for HVAC Piping
230523 General-Duty Valves for HVAC Piping
230529 Hangers and Supports for HVAC Piping and Equipment
230533 Heat Tracing for HVAC Piping
230548 Vibration Control for HVAC
230553 Identification for HVAC Piping and Equipment
230700 HVAC Insulation
230800 Commissioning of HVAC Systems
230900 Building Automation System
230993 Sequences of Operations for HVAC
232113 Hydronic Piping
232123 Hydronic Pumps
232300 Refrigerant Piping
232500 HVAC Water Treatment
233113 Metal Ducts

233300 Air Duct Accessories
233423 HVAC Power Ventilators
233424 Specialty Exhaust Systems
233600 Air Terminal Units
233713 Diffusers, Registers, and Grilles
233723 HVAC Gravity Ventilators
234100 Particulate Air Filtration
235216 Condensing Boilers
236426 Air-Cooled, Rotary Screw Water Chillers
237313 Modular Rooftop Units
237433 Direct-Fired Makeup Air Units
238126 Split-System Air-Conditioners
238239 Hot Water Unit Heaters
238240 Electric Unit Heaters

DIVISION 25 – INTEGRATED AUTOMATION – NOT USED

DIVISION 26 – ELECTRICAL

260519 Low-Voltage Electrical Power Conductors
260526 Grounding and Bonding for Electrical Systems
260529 Hangers and Supports for Electrical Systems
260533 Raceway and Boxes for Electrical Systems
260536 Cable Trays for Electrical Systems
260543 Underground Ducts and Raceways for Electrical Systems
260544 Sleeves and Sleeve Seals for Electrical Raceways and Cabling
260553 Identification for Electrical Systems
260572 Overcurrent Protective Device Short-Circuit Study
260573 Overcurrent Protective Device Coordination Study
260574 Overcurrent Protective Device Arc-Flash Study
260800 Commissioning of Electrical Systems
260943 Relay-Based Lighting Controls
262200 Low-Voltage Transformers
262413 Switchboards
262416 Panelboards
262713 Electricity Metering
262726 Wiring Devices
262813 Fuses
262816 Enclosed Switches and Circuit Breakers
262913 Enclosed Controllers
263213 Engine Generators
263600 Transfer Switches
264113 Lightning Protection for Structures
264313 Suppression Protection
265119 LED Interior Lighting

265619 LED Exterior Lighting

DIVISION 27 – COMMUNICATIONS

270500 Common Work Results for Communications
270528 Pathways for Audiovisual Systems
271100 Communications Equipment Room Fittings
271500 Communications Cabling
274116 Audiovisual Systems
276410 RF BDA-Based Signal Booster System

DIVISIONS 28 – ELECTRONIC SAFETY AND SECURITY

280500 Common Work Results for Electronic Safety and Security
283111 Digital, Addressable Fire-Alarm System
285000 Security Control System
285010 PLC Network UPS System
285020 Video Graphical User Interface
285030 Cabinets and Enclosures
285100 Audio Communication Systems
285200 IP Video Communication System
285260 Network Video System
285300 Access Control System
285400 Duress – Misc. Systems
285500 Auxiliary Control Systems
285900 Security Management Server

DIVISION 31 – EARTHWORK

311000 Site Clearing
312230 Aggregate Base Course
312271 Rip Rap
313116 Termite Control
315000 Excavation Support and Protection
316333 Drilled Micropiles

DIVISION 32 – EXTERIOR IMPROVEMENTS

321216 Bituminous Paving
321313 Concrete Paving
322905 Restoration of Surfaces
322931 Site Stabilization, Seeding, Fertilizing, and Mulching
323113.53 High-Security Chain Link Fences and Gates
329200 Turf and Grasses
329300 Plants

DIVISION 33 – UTILITIES

330500 Common Work Results for Utilities
332660 Water Pipe and Appurtenances

332700 Sanitary Sewer Pipe and Appurtenances
332701 Muffin Monster Manhole
332735 Exposed Piping

DIVISION 34 – TRANSPORTATION – NOT USED

END OF TABLE OF CONTENTS

HAMBLEN COUNTY GOVERNMENT
Invitation to Bid – 2022 Laundry Equipment for Hamblen County Justice Center (2022-16)

INVITATION TO BID

Office of the Hamblen County Mayor
511 West Second North Street
Morristown, TN 37814

ITB TIMELINE: Times listed below are in local time.

Date Issued:	Friday, April 29, 2022
ITB Title:	2022 Laundry Equipment for Hamblen County Justice Center (2022-16)
ITB Question Deadline:	Monday, May 16, 2022 @ 2:00p.m. *All correspondence and communication must be via email to the designated Hamblen County point of contact listed on page 6. Questions submitted by telephone call will not be answered. Questions submitted after this deadline will not be answered.*
ITB Answer Deadline:	Wednesday, May 18, 2022 @ 4:00p.m.
Bid Submission Deadline Date & Time:	Friday, May 27, 2022 @ 3:00p.m. *If the Hamblen County Courthouse is closed for business at the time scheduled for proposal opening, for whatever reason, proposals will be accepted and opened on the next business day of the County, at the originally scheduled hour.*
Bid Submission Opening Location:	Hamblen County Courthouse, West Wing Conference Room, 1st Floor, Administrative Building
Contract Award:	June 24, 2022

Bidder Initials CLS

Return to Committee Cover

INTRODUCTION:

Hamblen County (hereafter referred to as "County") is soliciting sealed, competitive bids for laundry equipment for the Justice Center (Architect's Project Number 590418) currently under construction. The items should be based on the specifications listed in this document.

The County's selection process will be based on compatibility with the specifications, delivery time and competitiveness of proposed fees.

TABLE OF CONTENTS:

I. Specifications

II. General Contractor's Project Schedule

III. General Information

IV. Submission Requirements

V. Forms:
   a. Bid Form
   b. Exceptions Form
   c. Anti-Collusion Statement
   d. Certification of Compliance Iran Divestment Act

VI. ITB Submission Checklist

Bidder Initials CLS

Return to Committee Cover

I. SPECIFICATIONS – Section 114000 Laundry Equipment:

- Shop drawings and product data to be included.
- Close out documents and warranties to be furnished.
- Bid submissions for Laundry Equipment must include furnishing, unloading and setting in place for final use.
- Must include all necessary trim, sealants, accessories for the complete installation and training.

General

1.1 Related Documents

- A. The general provisions of the contract including general and supplementary conditions and general requirements apply to the work specified in this section.

1.2 The following work will be done by other vendors.

- A. Plumbing: Refer to Division 22, including:
  - 1. Rough-in piping for gas and water supply and waste lines.
  - 2. Piping for supply and waste lines.
  - 3. Traps, grease traps, line strainers, tail pieces, valves, stops, shut-offs and miscellaneous fittings required for complete installation.
  - 4. Final connections.
- B. Electrical: Refer to Division 26, including:
  - 1. Rough-in conduit, wiring, line and disconnect switches, safety cut-offs and fittings, control panels, fuses, boxes and fittings required for complete installation.
  - 2. Final connections, including mounting and wiring of switches furnished as part of the laundry equipment (unless otherwise indicated on the drawings).

1.3 WORK INCLUDED THIS SECTION:

- A. Furnish and install all laundry equipment as specified herein, including that which is reasonably inferred, with all related items necessary to complete work shown on contract drawings and/or required by these specifications.

Bidder Initials CLS

Return to Committee Cover

ITEM 61 WASHER/EXTRACTOR, 55 LB. QUANTITY AS SCHEDULED

Provide soft-mount Washer-Extractor with the following features:

- A. 99 programming options.
- B. Slanted accessible control panel
- C. Stainless steel front, top and side panels.
- D. Stainless steel inner drum and tub.
- E. Large drain valve.
- F. High-capacity water inlets.
- G. Four (4) compartment dispenser.
- H. Eight (8) liquid chemical connections.
- I. Thirteen (13) chemical ports of various sizes including 1/2" manifold flush connections.
- J. Large door opening.
- K. Ozone-compatible design
- L. Durable micro-v belt.
- M. Voltage as scheduled, direction connection.
- Washer-Extractor to be as manufactured by Unimac, Model UY55, Continental, Speed Queen or exact equivalent.

ITEM 62 TUMBLE DRYER, 75 LB. QUANTITY AS SCHEDULED

Provide dryer with the following features:

- A. Standard air flow, 8” dia. maximum vent size.
- B. Multiple burner heat system provide quick, stable temperature control.
- C. Electrostatically applied paint for exterior finish.
- D. Self-cleaning lint filter.
- E. Galvanized pre-coated steel cylinder.
- F. Embossed steel front and side panels.
- G. Reversing cylinder option.
- H. Solid steel cap over top of dryer.
- I. Extended tumble to prevent wrinkling.
- J. Long-lasting 7/8" heavy duty rubber door gasket.
- K. Voltage as scheduled, direct connection.
- Dryer to be as manufactured by Unimac, Model UT-75, Continental, Speed Queen or exact equivalent.

Bidder Initials CLS

Return to Committee Cover

ITEM 66 COMMERCIAL WASHER, 16 LBS. QUANTITY AS SCHEDULED

Provide small chassis washer with the following features:

- A. 16 lb. capacity, 3.26 cubic feet wash basket.
- B. Safety door interlock.
- C. Vibration safety shut off.
- D. Manual controls.
- E. Top load model.
- F. Multi-speed drive motor wired as scheduled, direct connection.
- G. Manufacturers standard finishes, white.
- Washer to be as manufactured by Unimac, Model UWNMN25115CW01, Continental Speed Queen or exact equivalent.

ITEM 67 Commercial, Dryer, 18 LBS. QUANTITY AS SCHEDULED

Provide small chassis dryer with the following features:

- A. 18 lb. capacity, 7.0 cubic feet cylinder, front loading.
- B. Manufacturer's standard finishes.
- C. Electrical characteristics as scheduled, direct connection.
- D. Rear control.
- E. Motors wired for 120/208/1 phase operation.
- F. 4" diameter exhaust, 220 CFM.
- G. Gas: Field verify type
- Dryer to be as manufactured by Unimac, Model UDEMNRG173CW01, Continental, Speed Queen or exact equivalent.

II. GENERAL CONTRACTOR'S PROJECT SCHEDULE:

Approximately four weeks after award, provide plumbing and electrical submittal information plus information on extractor foundation requirements.

Approximately six to eight weeks after award, provide the balance of the required submittals.

Approximately December 2023 and/or January 2024, set laundry equipment.

Bidder Initials CLS

Return to Committee Cover

III. GENERAL INFORMATION:

Project Administrator:

The County Finance Department is the sole point of contact for this procurement. All communication between prospective bidders and the County upon receipt of this ITB shall be in email form to the County Finance Department as follows:

Johnna Harrell
511 West Second North Street
Morristown, TN 37814
Telephone: 423-586-1931
Email: Johnna.harrell@co.hamblen.tn.us

Any other communication will be considered unofficial and non-binding on the County. Communication directed to parties other than the County Finance Department may result in disqualification of the prospective proposer.

ITB Questions and Answers:

Questions regarding this ITB will be accepted via email to the Project Administrator until 2:00p.m. Monday, May 16, 2022. Questions submitted by telephone call will not be answered. Questions submitted after this deadline will not be answered.

Questions *and* Answers will be posted to the Hamblen County Government website, www.hamblencountytn.gov, under the Bids & Proposals Tab no later than 4:00p.m., Wednesday, May 18, 2022.

Proprietary Information and Public Disclosure:

Materials submitted in response to this competitive procurement shall become the property of Hamblen County. All bids submitted will remain sealed until the deadline for submission of bids has expired. Once a bid is submitted to Hamblen County Government and is opened, it constitutes a public record and is subject to the open records request pursuant to the Tennessee Open Records Act.

Cost of Bid Submission:

The County will not be liable for any costs incurred by any respondent in preparation of a response to this ITB, in conducting of a presentation, or any other activities related to responding to this ITB.

Bidder Initials CLS

Return to Committee Cover

Revisions to the ITB:

In the event it becomes necessary to revise any part of this ITB, addenda will be produced in writing and submitted to all prospective respondents known to the County and will be listed on the Hamblen County website, www.hamblencountytn.gov, under the Bids and Proposals Tab. All addenda issued must be signed and included with the bid submission.

The County reserves the right to cancel or to reissue this ITB in whole or in part prior to the execution of a contract.

Period of Performance:

The period of performance of any contract resulting from this ITB is tentatively scheduled to begin upon award of a contract.

Contract Terms:

All items in this ITB must be included with the bid submission. All contracts between parties as a result of this ITB shall be governed by and enforced in accordance with the laws of the State of Tennessee. In the event a dispute arises, the venue shall be in Hamblen County, Tennessee. The County shall require the person with authority to bind the company to sign all agreement(s) with the County.

Contract Termination:

The County reserves the right to cancel the contract at any time for breach of contractual obligations without penalty or recourse by giving the contracted firm a written notice of such termination of at least thirty (30) calendar days prior to said cancellation. Prior to issuing such a notice, the County will, if appropriate, provide the contracted firm with an opportunity to cure the breach within a reasonable period of time. Should the County exercise its right to terminate the contract for such reasons, the termination shall become effective on the date as specified in the notice of termination sent to the contracted firm. The contracted firm shall be entitled to receive just and equitable compensation for the work provided pursuant to the contract prior to the effective date of cancellation.

No Obligation Contract:

The County reserves the right to accept or reject any or all bid submissions at its sole discretion without penalty and to not issue a contract as a result of this ITB. The County also has the right to waive any formal defects in submissions when deemed in the best interest of the County. Further, the County reserves the right to negotiate with any respondent concerning matters which the County determines require clarification or changes not in conformity with the specific requirements set forth herein.

Bidder Initials CLS

Return to Committee Cover

Right To Withdraw:

Respondents have the right to request a withdrawal of their proposals from consideration due to error by giving notice at any time before and not later than two (2) days after submissions are publicly opened.

Commitment of Funds:

The Hamblen County Legislative Body are the only individuals who may legally commit the County to the expenditures of funds for a contract resulting from this ITB. No cost chargeable to the proposed contract may be incurred before receipt of a fully executed contract and/or County-issued purchase order. Obligations on contracts that envision extended funding through successive fiscal periods shall be contingent upon actual appropriations for the following years.

Invoice Requirements:

The County will pay one (1) invoice for the cost proposed in the successful bid submission. Payments will be made within fifteen (15) days after product training is complete.

The contracted firm will submit an invoice to the County Finance Department for the contracted amount. The invoice will include the following:

1. Purchase order number assigned by the County;
2. A description of the product delivered and installed; and
3. The date(s) the product was delivered, installed and training completed.

IV. SUBMISSION REQUIREMENTS:

Respondents are required to submit one (1) complete packet either electronically or in a sealed envelope based on the instructions below. Bids, whether mailed, hand-delivered or electronically submitted must arrive no later than 3:00p.m. local time on Friday, May 27, 2022.

Instructions for Submitting Bids Electronically:

Electronic submission should be sent to Johnna.harrell@co.hamblen.tn.us via WeTransfer.com, an internet-based computer file transfer service. The message line of the WeTransfer page must state: **2022 LAUNDRY EQUIPMENT FOR HAMBLEN COUNTY JUSTICE CENTER ITB#2022-16, MAY 27, 2022 @3:00P.M.** Please note: Bids should be submitted no earlier than May 21, 2022 as the documents are only available for download for seven (7) days and we cannot access them for any reason prior to Friday, May 27, 2022 @ 3:00p.m.

Bidder Initials CLS

Return to Committee Cover

Instructions for Submitting Hard Copies of Bids:

Envelopes **must** arrive **sealed** and clearly **marked** with **2022 LAUNDRY EQUIPMENT FOR HAMBLEN COUNTY JUSTICE CENTER ITB#2022-16 MAY 27, 2022 @ 3:00P.M.** on the outside of the envelope to the Hamblen County Mayor's Office, 511 West Second North Street, Morristown, TN 37814, Attention: Johnna Harrell.

Respondents assume the risk for the method of delivery chosen. The County assumes no responsibility for delays caused by any delivery service whether in-person or electronically. Late proposals will **not** be accepted.

Submission Content:

All items listed below **must** be included in your submission.

1. Bid Form (included)
2. Exceptions Form (included)
3. Anti-Collusion Statement (included)
4. Certificate of Compliance with Iran Divestment Act (included)
5. Any addenda issued

Bid Form:

The respondent must complete the bid form on page 11 of this document. This includes the respondent's contact information and proposed cost.

Exceptions Form:

The exceptions form listed on page 12 of this document give options of "NO EXCEPTIONS TAKEN" **or** "BIDDER TAKES EXCEPTIONS'. One of these should be selected and submitted with the sealed bid.

If a bidder **has** exceptions to the scope of services listed in this document, they must be listed on the exceptions form on page 12 of this document.

If the bidder **has no** exceptions to the scope of services listed in this document, they should indicate so by selecting, "NO EXCEPTIONS ARE TAKEN" on the exceptions form on page 12 of this document.

Anti-Collusion Statement:

The respondent certifies by signing the anti-collusion statement on page 13 of this ITB that this proposal is made without prior understanding, agreement, or accord with any other person submitting proposals for the same service and that this submission is in all respects bona fide, fair and not the result of any act of fraud or collusion with another person engaged in the same line of business or commerce.

Bidder Initials CLS

Return to Committee Cover

Iran Divestment Act:

The respondent must certify on page 14 of this ITB that neither they nor any of their successors, parent companies, subsidiaries or companies under common ownership or control certifies, under penalty of perjury, that to the best of their knowledge and belief that they are not on the list created pursuant to Tennessee Code Annotated § 12-12-106.

Signatures:

The Exceptions Form, Anti-Collusion Statement, Certification of Compliance with the Iran Divestment Act, and all ITB Amendments must be signed and dated by a person authorized to legally bind the respondent to a contractual relationship.

Bidder Initials CLS

Return to Committee Cover

V. FORMS:

a) BID FORM:

Information of company or individual with whom the contract would be written	
Company Legal Name:	Large Equipment Inc. d/b/a Laundry Systems of Tennessee
Address:	1506 W. Meadow Ct. Sevierville, TN 37862
Phone:	865-453-9972
Primary Point-of-Contact Email Address:	Lloyd Smith lsmith@laundrysystems.com
How long are quotes guaranteed for?	30 days

Quote for Justice Center Laundry Equipment. Please quote each item on a per unit basis and based on specifications listed in this document.
If a separate sheet is needed for quoting, please note "Bid Form – Quote Section" at the top.

Item	Manufacturer	Model	Cost
Washer/Extractor 55lb.	Continental	EH060I1102111500	$ 13,262.68667 per unit cost x qty (3) units= $39,788.06 total
Tumble Dryer 75lb.	Continental	KT075NNN0RXH6W00	$ 6,180.80667 per unit cost x qty (3) units= $18,542.42 total
Commercial Washer 16lb,	Continental Econo Wash	KWNMN2SP115TW01	$ 1,271.62
Commercial Dryer 18lb.	Continental Econo Dry	KDGMNRGS113TW01	$ 1,006.35
Warranty Information: 55lb washer & 75 lb dryer warranty- 1 year labor warranty; 5 year full factory all parts Econo wash & econo dryer- 3-YR Limited Parts Warranty; 5-YR Key Component Warranty			
Grand Total: Including equipment, trim, sealants, and accessories needed for complete installation. Includes unloading, setting in place for final use and training.			$ 64,541.78

Bidder Initials CLS

Return to Committee Cover

b) EXCEPTIONS FORM

Bidder MUST sign the appropriate statement below, as applicable.

☑ Bidder understands and agrees to all terms, conditions, requirements and specifications stated herein. NO EXCEPTIONS ARE TAKEN.

FIRM NAME:	Large Equipment Inc. d/b/a Laundry Systems of Tennessee
AUTHORIZED REPRESENTATIVE: (printed)	Lloyd Smith
AUTHORIZED REPRESENTATIVE: (signature)	Lloyd Smith
DATE:	5/24/22

☐ Bidder takes exception to the following terms, conditions, requirements and specifications stated herein.

FIRM NAME:	
AUTHORIZED REPRESENTATIVE: (printed)	
AUTHORIZED REPRESENTATIVE: (signature)	
DATE:	
EXCEPTIONS TO NOTE:	

Bidder Initials CLS

Return to Committee Cover

c) ANTI-COLLUSION STATEMENT

By signing this form the respondent agrees that he/she has not divulged to, discussed, or compared his/her submission with other respondents and has not colluded with any other respondent whatsoever. Note: no premiums, rebates or gratuities to any employee or agent are permitted with, prior to, or after any delivery of service. Any such violation will result in any contract related to this ITB being null and void and could constitute a felony and result in a fine, imprisonment and civil damages.

The undersigned certifies that he/she has read, understands, and agrees to all terms, conditions, and requirements of this ITB, and is authorized to enter into a contract with Hamblen County Government. This form must be signed personally by the respondent or the respondent's authorized agent. All signatures must be original.

Lloyd Smith
Signature

Regional Sales Manager
Title

Lloyd Smith
Printed Name

5/24/22
Date

By signing this form, the respondent signifies understanding and agreement with Hamblen County Government's Terms and Conditions.

Bidder Initials CLS

Return to Committee Cover

d) CERTIFICATION OF COMPLIANCE WITH IRAN DIVESTMENT ACT
Tenn. Code Ann. § 12-12-101 et seq.

Comes Jeff W. Large, for and on behalf of
(Printed name of Principal Officer of Company)

Large Equipment Inc. d/b/a Laundry Systems of Tennessee, (the "Company") and, after being duly authorized by the Company so to do, makes oath that:

By submission of these qualifications, each respondent certifies, and in the case of a joint submission each party certifies, under penalty of perjury, that to the best of their knowledge and belief that each respondent is not on the list created pursuant to the Iran Divestment Act, Tenn. Code Ann. § 12-12-106.

Jeff W. Large
Signature

President
Title

5/24/22
Date

Bidder Initials CLS

Return to Committee Cover

VI. ITB SUBMISSION CHECKLIST:

- ☐ Submission is labeled on the outside of the envelope or in the subject line, if electronically submitted, '2022 LAUNDRY EQUIPMENT FOR HAMBLEN COUNTY JUSTICE CENTER ITB#2022-16, MAY 27, 2022 @ 3:00p.m. as instructed on pages 8 & 9 Section IV of this document
- ☐ Bid Form completed (pages 11 Section V.a. of this document)
- ☐ Exceptions Form completed and signed (page 12 Section V.b. of this document)
- ☐ Anti-Collusion Statement Signed (page 13 Section V.c. of this document)
- ☐ Certification of Compliance with Iran Divestment Act completed and signed (page 14 Section V.d. of this document)
- ☐ Signed Addenda (if applicable)

Bidder Initials CLS

Return to Committee Cover

CG75-85+

ProDry2+ Drying Tumbler

ARCHITECTURAL/MECHANICAL
PRODUCT SPECIFICATIONS

ProDry2+

Inverter Drive

PRODUCT SPECS	
Capacity *lbs*	up to 75
Cylinder Diameter *inch*	37
Cylinder Depth *inch*	36
Cylinder Volume *cu ft*	22.4
Net Weight *lbs* Gas Steam	 680 720
Crated Weight *lbs* Gas Steam	 730 770
Machine Width *inch*	38.5
Machine Depth *inch*	53
Machine Height *inch*	77.3
Door Opening *inch*	27
Floor to Door *inch*	29.2
Shipping Dimensions *inch* WxDxH	41.5 x 56 x 81
Exhaust Diameter *inch*	8
Exhaust Air Flow *cfm*	800
Exhaust Back Pressure (max) *WCI*	0.5
Required Makeup Air *sq in*	195
Electric Heating *kW*	36
Gas Connection *inch*	1/2 NPT
Gas Heating *BTU/h*	165,000
Gas Pressure (max/recommended/min) Natural Gas *wc* Propane *wc*	 10.5 / 6.5 / 5 13 / 11 / 10
Steam Connection *inch*	3/4 NPT
Steam Heating *BTU/h* at 100 PSI	133,900
BHP Consumption *BHP* at 100 PSI	6.1

GAS/STEAM MODELS

AVAILABLE VOLTAGES	WIRE CONDUCTOR	FULL LOAD AMPS	RECOMMENDED BREAKER SIZE
100-120/50-60/1	1W+N+G	12	15
200-240/50-60/1-3	2W+G	7	15
380-415/50-60/3	3W+G	3	15
440-480/50-60/3	3W+G	3	15

ELECTRIC MODELS - CLASSIC 36 kW

AVAILABLE VOLTAGES	WIRE CONDUCTOR	FULL LOAD AMPS	RECOMMENDED BREAKER SIZE
200-208/50-60/3	3W+G	104	150
230-240/50-60/3	3W+G	90	125
380/50-60/3	3W+G	56	70
400-415/50-60/3	3W+G	52	70
440/50-60/3	3W+G	49	70
460-480/50-60/3	3W+G	45	60

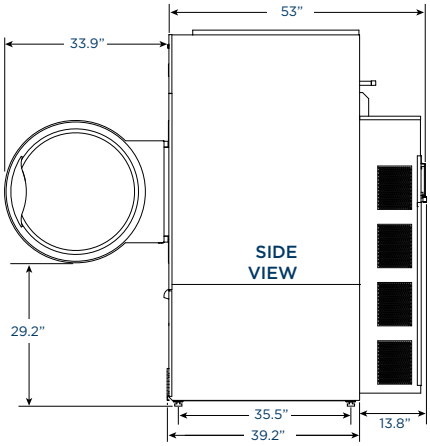

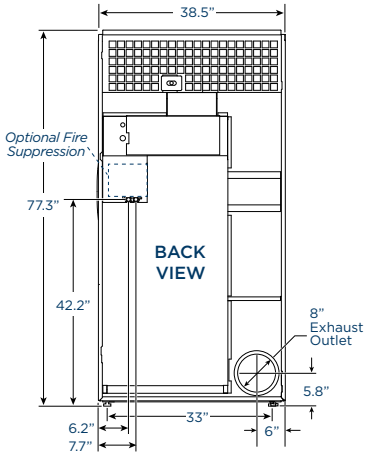

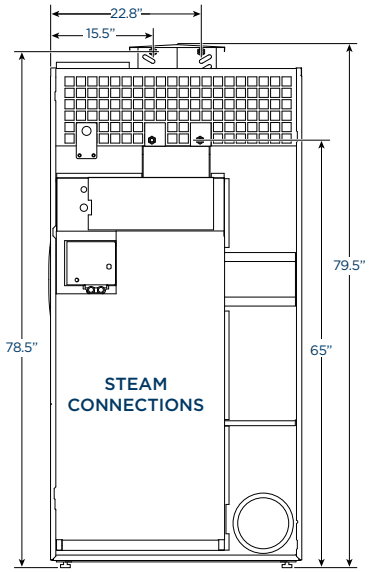

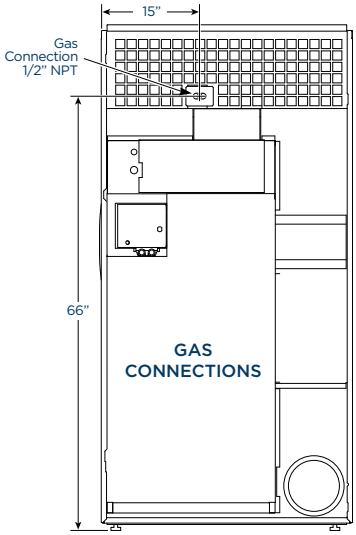

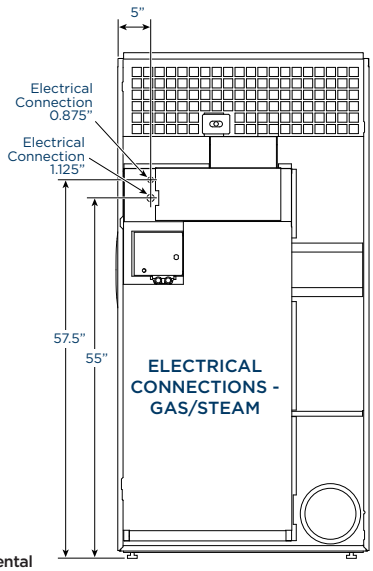

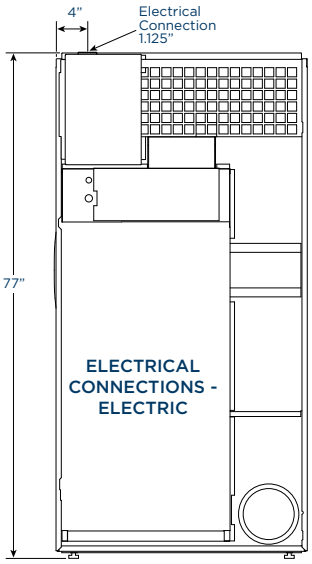

* Specifications subject to change without notice or obligation. Contact Continental Girbau at (800) 256-1073 for dimensions not shown or for clarification.

cgilaundry.com • (800) 256-1073
2500 State Road 44 • Oshkosh, WI 54904

CONTINENTAL GIRBAU®

Return to Committee Cover

GIRBAU NORTH AMERICA

Standard Limited Warranty

Commercial & Vended Drying Tumblers & Gear Dryers

Product Warranty for Commercial & Vended Drying Tumblers & Gear Dryers

Models — KT-Series (ProDry2+ and ExpressDry+), CG-Series, ED-Series and ExpressDry Gear Dryers

Revised April 2021 (Starting Serial Number by Model Available Upon Request)

I. Warranty Coverage and Duration

Girbau North America, Inc. (GNA), warrants to the original owner (Purchaser), or by factory authorized warranty transfer to a new owner of a Continental Girbau, Girbau Industrial, Poseidon Textile Care or Sports Laundry-branded drying tumbler (Equipment). This warranty shall be the limit of GNA's liability for a breach of a warranty. GNA will repair or replace, free of charge, any part which fails as a result of a defect in material or workmanship. The term of warranty coverage shall be as follows:

- For a period of three years (36 months) after the date of original installation.
- For all new replacement parts, the remaining term of the limited warranty of the Equipment to which the parts are incorporated or one year (12 months) from the date of sale of the replacement parts, whichever time period is greater.
- The drum, shaft and chassis for a period of five years (60 months) after the date of original installation. (ED/CG-Series models only)

If the date of installation of the Equipment cannot be determined, it shall be deemed to be 90 days after the date of sale by GNA.

II. Warranty Exclusions

- GNA will not provide for the replacement of fuses.
- GNA will not provide replacement of any part which fails for reasons other than a defect in material or workmanship. (Ex: misuse, improper installation, transportation damage, etc.)
- GNA will not honor this warranty for Equipment or parts which have been altered without the prior written consent of GNA.
- GNA will not honor this warranty if machines are mounted on bases not supplied or approved of in writing by GNA.
- GNA will not honor this warranty if parts from another manufacturer or parts not purchased through GNA have been incorporated into the Equipment.
- GNA is not responsible for:
  - labor, freight or transportation costs incurred in the replacement of any part.
  - clothing or machine damage caused by foreign objects placed in the Equipment.
  - any incidental or consequential damage resulting from any malfunction of the Equipment or part.
  - any Equipment or part failure if such failure is due to an act of God, natural disaster, vandalism, intentional infliction of damage or dereliction.
  - loss of use, lost time or profits due to delay in repair or replacement of defective parts.

III. How to Obtain Replacement Equipment or Parts Under the Limited Warranty

For warranty service, Purchaser shall contact the GNA distributor (Distributor) from which the Equipment or part was originally purchased or the nearest Distributor. In the event that the Purchaser is unable to make contact with a Distributor, the Purchaser shall contact GNA directly at the contact points set forth below. Proof of purchase, model number, serial number and the defective part are required in order to exercise Purchaser's rights under this limited warranty. GNA shall have the discretion to require the return of defective parts, however, no parts shall be returned to GNA without GNA's prior written direction. The determination by GNA not to require the return of defective parts shall not be deemed to constitute a waiver of this warranty or of GNA's right to enforce all of the terms of this warranty thereafter.

Important: Consult your authorized Distributor regarding the applicability, if any, of warranty coverage to you.

THIS WARRANTY IS EXCLUSIVE AND EXPRESSLY IN LIEU OF ALL OTHER WARRANTIES EXPRESS OR IMPLIED, INCLUDING THE WARRANTIES OF MERCHANTABILITY AND FITNESS FOR USE AND ALL OTHER OBLIGATIONS OR LIABILITIES IMPLIED BY OPERATION OF LAW. GNA NEITHER ASSUMES NOR AUTHORIZES ANY OTHER PERSON TO ASSUME FOR GNA ANY OTHER LIABILITY IN CONNECTION WITH THE SALE OF THE EQUIPMENT OR PARTS. THE REMEDIES PROVIDED IN THIS LIMITED WARRANTY ARE EXCLUSIVE AND PURCHASER HEREBY WAIVES ALL OTHER REMEDIES, EXPRESS OR IMPLIED BY LAW, INCLUDING WITHOUT LIMITATION, ANY AND ALL INCIDENTAL DAMAGES AND CONSEQUENTIAL DAMAGES, WHETHER OR NOT OCCASIONED BY GNA'S NEGLIGENCE. THIS WARRANTY SHALL NOT BE EXTENDED, ALTERED OR VARIED EXCEPT UPON THE PRIOR WRITTEN INSTRUMENT EXECUTED BY AN AUTHORIZED GNA REPRESENTATIVE.

Girbau North America brands covered under this limited warranty are:

CONTINENTAL GIRBAU® · GIRBAU INDUSTRIAL® · POSEIDON TEXTILE CARE SYSTEMS® · SPORTS LAUNDRY SYSTEMS® ATHLETIC LAUNDRY SOLUTIONS

gnalaundry.com • 800-256-1073 • 2500 State Road 44 • Oshkosh, WI 54904

Return to Committee Cover

© 2021 Girbau North America Form No. W-AD-3YR 06/21

CONTINENTAL GIRBAU

ECON-O-WASH / ECON-O-DRY WARRANTY CERTIFICATE

COMMERCIAL & VENDED

CONTINENTALCARE™

BUY WITH COMPLETE CONFIDENCE

3-YR LIMITED PARTS WARRANTY
5-YR KEY COMPONENT WARRANTY

Return to Committee Cover

Return to Committee Cover

EH060

ON-PREMISE E-SERIES SOFT-MOUNT WASHER-EXTRACTOR

ARCHITECTURAL/MECHANICAL
PRODUCT SPECIFICATIONS

PRODUCT SPECS	
Capacity *lbs*	60
Cylinder Diameter *inch*	30.5
Cylinder Depth *inch*	20.5
Cylinder Volume *cu ft*	8.4
Net Weight *lbs*	1289
Crated Weight *lbs*	1338
Machine Dimensions *inch* WxDxH	38.4 x 48.2 x 58.1
Door Opening *inch*	16.8
Floor to Door *inch*	22.9
Shipping Dimensions *inch* WxDxH	39.4 x 49.6 x 64.2
Washing Speed *rpm*	
Logi Control	42
Inteli Control	22/27/36/42
Spin Speeds *rpm*	42/86/350/550/725/966
G-force	0.75/3.2/52/129/224/400
Static Force Transmitted *lbs*	1528
Dynamic Force Transmitted *lbs*	291
Frequency of Dynamic Force *Hz*	16.1
Available Voltages/Wire Conductor/Amp	
Hot Water (standard)	208-240/60/1, 2W+G, 15
Hot Water (standard)	208-240/60/3, 3W+G, 10
Electric Auxiliary Heat (optional)	208/60/3, 3W+G, 50
Electric Auxiliary Heat (optional)	240/60/3, 3W+G, 60
Steam Auxiliary Heat (optional)	208-240/60/1, 2W+G, 15
Steam Auxiliary Heat (optional)	208-240/60/3, 3W+G, 10
Drain Diameter *inch*	3
Water Inlets *inch*	2 @ 3/4
Recommended Water Pressure *PSI*	30-60
Water Flow *gal/min*	16
Steam Connection *inch*	1/2
Steam Pressure (optional) *PSI*	29-87
Steam Flow (optional) *lbs/h*	176
Total Power *kW*	1.88
Electrical Heating Power (optional) *kW*	20.3

*** Specifications subject to change without notice or obligation. Contact Continental Girbau at (800) 256-1073 for dimensions not shown or for clarification.**

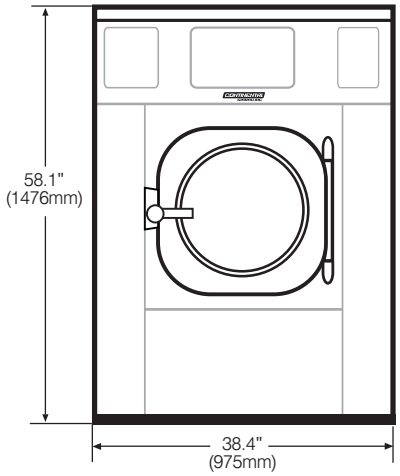

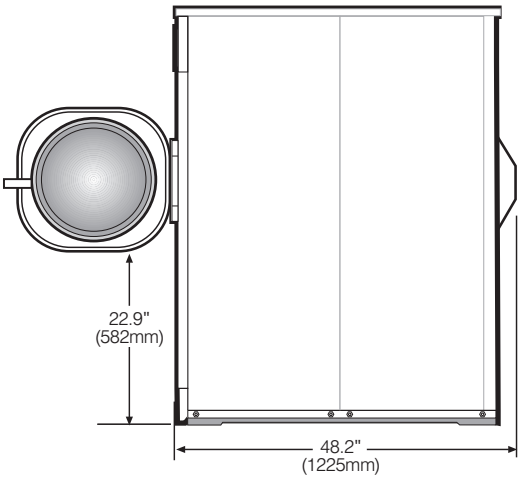

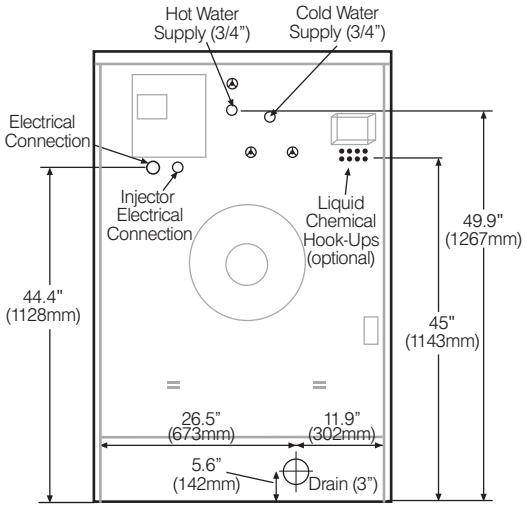

cgilaundry.com • (800) 256-1073
2500 State Road 44 • Oshkosh, WI 54904

Return to Committee Cover

Return to Committee Cover

EconoWash Top-Load Washers
AFFORDABLE EFFICIENCY

DURABILITY
The EconoWash topload is constructed for unmatched longevity. It features a durable stainless steel washtub that won't corrode, chip or pit; a scratch-resistant, hard-baked porcelain enamel top and lid; a heavy-duty, two-speed motor; a porcelain-coated steel outer drain tub that resists mold and mildew; and a transmission with only six moving parts for less maintenance and wear – all wrapped up in a rugged galvanized steel base and cabinet!

ENERGY EFFICIENCY & HIGH SPIN SPEED
While most toploads consume 40 gallons of water per load, the EconoWash topload is engineered with a water saving feature that uses just 27.3 gallons per load. By using less water, laundries significantly cut hot water consumption—saving energy and lowering utility costs. Moreover, the washer delivers 710 RPM spin speeds to remove more water from every load. In doing so, laundries enjoy reduced dry time, boosted productivity and lower utility costs. The EconoWash topload offers superior energy efficiency. At start-up the machine draws fewer amps—conserving additional electricity. Moreover, EconoWash Washers conform to the Department of Energy (DOE) 2013 efficiency standards.

QUALITY OF THE WASH
Superior engineering means laundry gets cleaner. The EconoWash topload features a curved, four-vane polypropylene agitator with a 210 degree agitator stroke—the longest in the industry. The machine's lengthy stroke delivers increased wash action for superb wash results.

AUTOMATIC BALANCE SYSTEM
Designed to automatically adjust out-of-balance loads, EconoWash completes wash cycles quietly, smoothly and without interruption. A rugged suspension system features six "V" mounted springs to eliminate interrupted wash cycles and out-of-balance loads. It works to reduce vibrations and noise, minimizes machine wear and tear and eliminates the need for an out-of-balance switch.

USER-FRIENDLY MDC CONTROL
EconoWash touts a highly flexible electronic control offering customers multiple wash options and ease of use. Available in single coin drop, dual coin drop, token (or variable currency) drop, and pulse start options, the control allows users to select from normal, permanent press, delicate, or one of three energy-saving cycle options; and three water temperatures – hot, warm and cold. In keeping with efficiency, the control automatically uses cold water as its default. Keeping operators informed, an LED display illuminates remaining cycle time. Operators simply load, make selections and press start.

PROGRAMMABILITY
EconoWash owners enjoy greater features than ever before. Not only does the electronic control offer cycle auditing, testing diagnostics and error code capabilities, it allows programmability of extended cycle times, two agitation and spin speeds, and disabling of hot fills and spray rinses. In doing so, laundries can improve efficiency and wash action to fit their own unique needs.

Four Vane Agitator

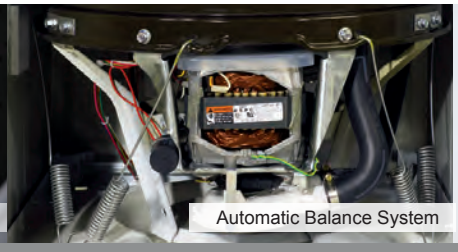
Automatic Balance System

Heavy-Duty Drain Hose

User-Friendly Control

EconoWash Product Specifications

	KWN
Capacity *lbs*	16
Cylinder Volume *cu ft*	3.19
Net Weight *lbs*	190
Crated Weight *lbs*	210
Machine Dimensions *inch* WxDxH	25.63 x 28 x 43
Floor to Work Surface *inch*	36
Shipping Dimensions *inch* WxDxH	27.5 x 30 x 44.25
Washing Speed *rpm* high/low	67/44
Spin Speed *rpm* high/low	710/473
Available Voltages/Amp	120/60/1, 15 Amp
Modified Energy Factor (MEF)	1.35
Water Consumption Factor (WCF)	8.8
Drain Diameter *inch*	1 1/2
Water Inlets *inch*	3/4
Recommended Water Pressure *PSI*	20-120
Water Flow *gal/min*	37.5
Total Power *kW*	.5

MEF
Modified Energy Factor
(Cubic feet per kilowatt hour per cycle)
1.65

WCF
Total Water Consumption Factor
(Gallons per cycle per cubic feet)
8.4

* Modified Energy Factor (MEF) is measured in cubic feet per kilowatt-hour per cycle. Water Consumption Factor (WCF) is measured in gallons per cycle per cylinder cubic feet. MEF and WCF statistics are according to Department of Energy (DOE) testing standards report by Intertek, an independent testing laboratory.

Return to Committee Cover

Return to Committee Cover

GIRBAU NORTH AMERICA

Girbau North America (formerly Continental Girbau Inc.) is an industry-leading provider of on-premise, vended and industrial laundry equipment throughout North America. Its commercial laundry products include continuous batch tunnel washing systems, washer-extractors, drying tumblers, feeders, ironers, drywork and flatwork folders, stackers, and associated conveyor systems. Proven performers, these products are engineered for efficiency, productivity, programmability, ease-of-use and durability. They also meet rigorous environmental and safety standards (ISO9001 and ISO14001) and can contribute to LEED® Certification.

Girbau North America is much more than a renowned supplier of vended, commercial and industrial laundry equipment. “Our Mission is Your Success” and that’s why we offer a web of support services to our customers, including financing, laundry design and layout, technologically advanced commercial and industrial equipment, a comprehensive parts offering, outstanding customer care, and a professional distributor network. Girbau North America delivers complete support before, during and after the sale.

GIRBAU GLOBAL LAUNDRY SOLUTIONS

Established in 1995, Girbau North America is the largest of 15 subsidiaries of Girbau Global Laundry Solutions (Girbau), a family owned laundry equipment manufacturer based in Vic, Spain. Employing more than 1,000 team members across the globe, Girbau markets its industrial, commercial and vended laundry products throughout 100 countries worldwide. Girbau’s goal is to create added value through straightforward, dependable, efficient and innovative laundry solutions engineered to facilitate customer growth and profit.

Ever focused on environmental sustainability and product innovation, Girbau Global Laundry Solutions strives to provide the industry’s best products and customer support.

LAUNDRY MARKETS

Girbau North America offers the laundry industry’s most comprehensive product offering and caters to a wide variety of markets.

Commercial
Small- to medium-volume commercial and on-premise laundries, including hotels, spas, fire departments and more.

Vended
Self-service laundries where customers can do their laundry. Many include full-service laundry processing options.

Industrial
High-volume laundries that most commonly serve the hospitality, linen rental or healthcare industries.

Textile Care
Garment care professionals that utilize wet cleaning processes.

Multi-Housing
Residential apartments, retirement communities and dormitories with centralized resident laundries.

BRANDS, DIVISIONS, SUBSIDIARIES & NETWORKS

Girbau North America brands, divisions and subsidiaries are in place to provide value-added products and services to distributors and customers.

CONTINENTAL GIRBAU®

The flagship brand of vended and on-premise commercial laundry products.

ONEPRESS® INDUSTRIAL FLATWORK IRONERS

An industrial ironer brand for medium- and high-volume laundries.

GIRBAU INDUSTRIAL®

The industrial laundry product brand for high-volume laundries.

SPORTS LAUNDRY SYSTEMS® ATHLETIC LAUNDRY SOLUTIONS

The athletic laundry brand that combines washers and dryers with ozone injection.

POSEIDON TEXTILE CARE SYSTEMS®

The wet cleaning brand marketed to textile care operations.

EXPRESS LAUNDRY CENTER®

A vended laundry solution available to investors that teams equipment, services and support.

CustomSelect FINANCING

Division that provides financing solutions to Girbau North America customers.

CONTINENTALCREATIVESERVICES

Division that provides marketing and advertising to Girbau North America distributors and customers.

We have a professional distributor network that assist customer before, during an after the sale.

DISTRIBUTED BY:

GIRBAU NORTH AMERICA

gnalaundry.com • info@gnalaundry.com • 800-256-1073
2500 State Road 44, Oshkosh, WI 54904

Return to Committee Cover

© 2020 Girbau North America Inc. Form No. B-OA-ECONO 03/20

E-Series

High-Performance Washer-Extractors for On-Premise Laundries

EH030 EH040 EH060 EH070 EH080

Maximizing Energy Efficiency & Productivity.

CONTINENTAL GIRBAU®

Return to Committee Cover

E-Series High-Performance Washer-Extractors

Engineered for installation flexibility and longstanding performance, E-Series Washers deliver superior productivity and wash quality, using very little energy and water. Backed by a leading industry-warranty, highly programmable E-Series Washers feature built-in, optional laundry management software and disinfection monitoring.

Deliver More Using Less

Lower Utility Costs

Not only are E-Series Washers stingy on water, they reach high extract speeds up to 405 G-force for more moisture removal. This high-speed extract reduces resulting dry times by up to 50 percent, which cuts the gas consumed to dry a load by more than 33 percent.

Less Linen Loss

Because linens retain less moisture, exposure to dryer heat and mechanical action is reduced, which helps reduce linen loss and extend linen life.

Greater Productivity

Thanks to programmable controls and shorter dry times, E-Series Washers greatly improve laundry productivity — reducing labor costs and extending linen life. On average, labor accounts for 60 percent of the laundry's budget. By installing high-extract E-Series Washers, one full time employee can process more pounds of soiled laundry per hour — reducing your laundry cost per pound.

Innovative Technology

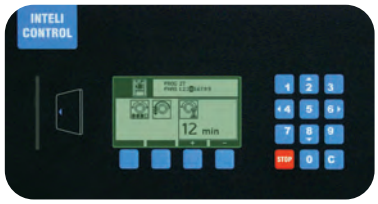

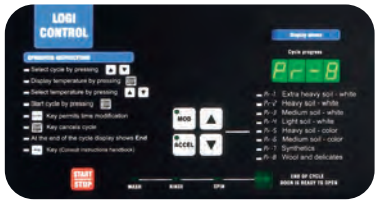

Inteli Control

Provides up to 99 cycle programs and allows complete control of every conditional aspect of the wash process! An LCD display offers easy-to-understand icons that indicate cycle and programming status. With an unlimited number of phases per program, operators can manually adjust parameters during wash cycle. Versatile and easy to use, the Inteli allows for auto chemical injection, a connection to an external dosing system, adjustable dosing signal length and simultaneous dosing of two products.

Logi Control

A highly flexible control available on 30- to 60-pound models, offers eight modifiable programs. With up to nine phases per program, the Logi allows for auto chemical injection and connection to an internal dosing system.

Return to Committee Cover

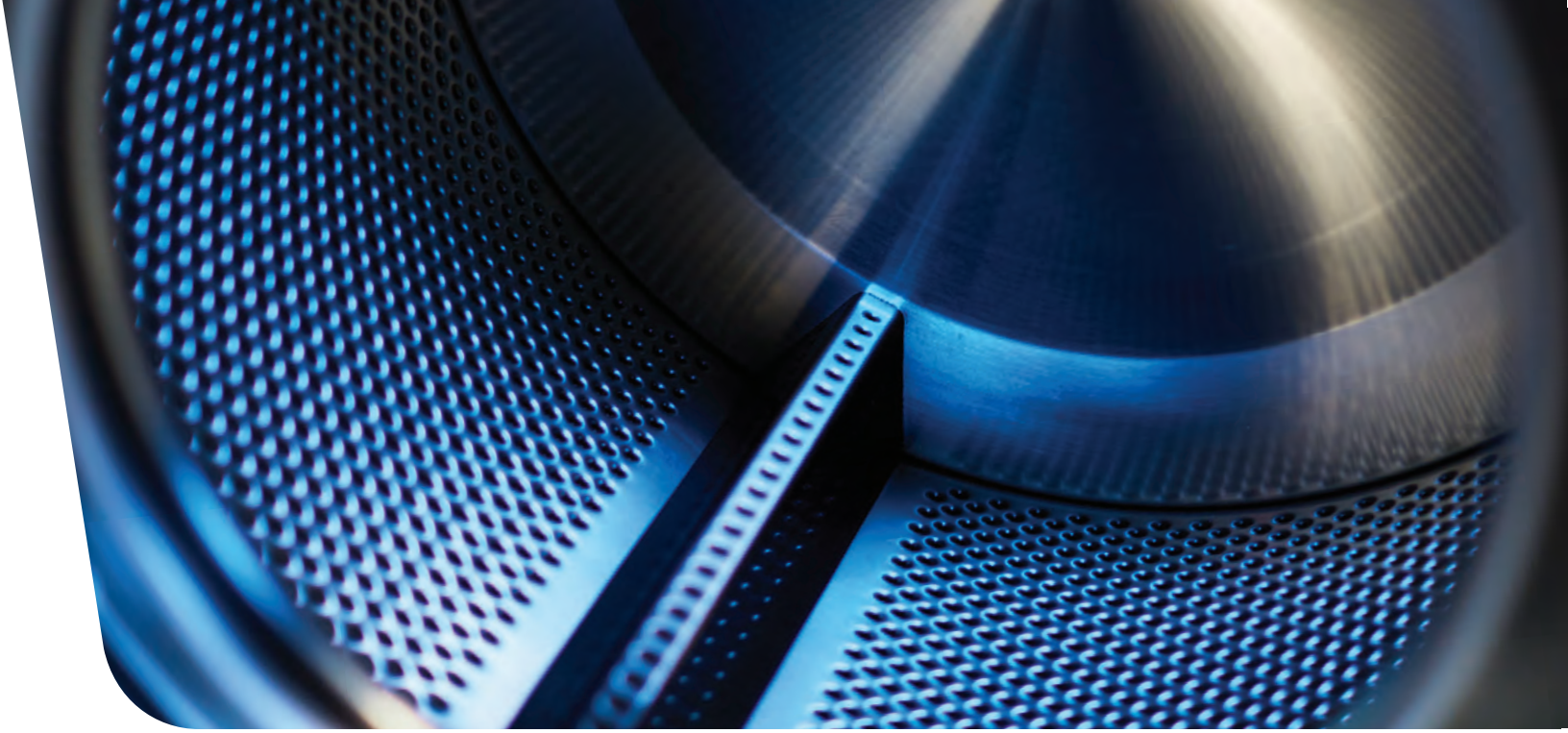

Unique Design

Ease of Maintenance

Nearly all components are accessible via the front or top cover of the washer, which is easily removed without interfering with detergent dispensers.

Dual Safety Features

The washer is only active if the closed and locked door signals have been validated.

Proven Construction, Durability & Longevity

Backed by an industry-leading factory warranty, E-Series Washers feature inner and outer drums of durable AISI-304 stainless steel, oversized bearings and bearing housings, a quality sealing system, and an oversized door with heavy-duty, bolt-style door hinges.

AquaFall® System

As the drum turns, lifters release water from above for better saturation and rinsing using less water and time.

AquaMixer® System

By achieving precise bath temperatures, E-Series improves wash action, saves energy, minimizes hot water consumption and reduces wash time.

Smooth Touch

A system of deep-punched holes, without sharp edges, ensures that the linen is treated delicately.

Sump-Less Design

Save up to 3 gallons of water with each fill when compared to machines equipped with an outer tub sump.

GDrive

An exclusive management and communication system between the inverter, motor and microprocessor ensures the assembly is properly balanced for a longer life and saves on energy consumption.

Zero-Impact Installation

The freestanding design allows E-Series to be easily installed and moved with same day operation. The machine's Multi-Directional Springs system absorbs 95 percent of all vibrations.

Sapphire Remote Management System

Optional remote management is built into E-Series Washers. Sapphire greatly facilitates the management of a laundry, reporting irregularities and reducing costs and downtime.

Disinfection Monitoring Package (DMP)

The optional, exclusive DMP integrates with the Sapphire Remote Management System to ensure pre-programmed washing parameters and disinfection requirements are met.

Return to Committee Cover

More About Us

Continental Girbau is a brand of Girbau North America (GNA) which is the North American subsidiary of the Girbau Group. Renowned for innovation, efficiency, quality and reliability, Girbau operates 16 subsidiaries and markets its products throughout 100 countries across the globe. They provide the most comprehensive offering of commercial, industrial, and vended laundry solutions in the world. Girbau laundry products meet rigorous environmental and safety standards established by the International Organization for Standardization (ISO) and holds both ISO9001 and ISO14001 certifications.

Product Specifications*

	EH030	EH040	EH060	EH070	EH080
Capacity lbs	30	40	60	70	80
Cylinder Diameter inch	24.4	27.6	30.5	32.5	32.5
Cylinder Depth inch	16.4	17.7	20.5	20.9	23.5
Cylinder Volume cu ft	4.4	6.1	8.4	9.9	11.3
Net Weight lbs	758	1049	1289	1401	1499
Crated Weight lbs	820	1091	1338	1484	1583
Dimensions inch (WxDxH)	31.3 x 34.9 x 52.2	34.2 x 37.9 x 55.3	38.4 x 48.2 x 58.1	41.5 x 52 x 59.1	41.5 x 52 x 59.1
Door Opening inch	12.9	16.8	16.8	16.8	16.8
Floor to Door inch	20	20.3	22.9	23.6	23.6
Shipping Dimensions inch (WxDxH)	32.4 x 37.2 x 58.8	35.3 x 40 x 61.6	39.4 X 49.6 X 64.2	42.3 x 52 x 65.2	42.3 x 52 x 65.2
Control Options	Logic or Intelligent	Logic or Intelligent	Intelligent	Intelligent	Intelligent
Washing Speeds rpm Logic Control	48	45	—	—	—
Washing Speeds rpm Intelligent Control	17/23/30/37/44	17/23/30/37/44	22/27/36/42	16/21/26/36/42	21/26/36/42
Spin Speeds rpm Logic Control	48/100/400/ 600/800/1000	45/100/375/570/750/950	—	—	—
Spin Speeds rpm Intelligent Control		44/100/375/570/750/950	42/86/350/550/725/966	83/335/530/698/937	83/335/530/698/931
G-force	0.8/3.46/56/125/222/346	0.8/3.9/55/127/220/354	0.75/3.2/52/129/224/400	3.17/52/130/225/405	3.17/52/130/225/400

* Product specifications and details are subject to change without notice. For the most current and complete technical specifications, architectural line drawings and warranty information, please visit continentalgirbau.com. E-Series Washer-Extractors are available in 20- to 255-pound capacities.

EH030 EH040 EH060 EH070 EH080

continentalgirbau.com • info@continentalgirbau.com
800-256-1073

CONTINENTAL GIRBAU®
A GIRBAU NORTH AMERICA BRAND

© 2022 Girbau North America 01/22

Return to Committee Cover

ProDry2+

CG30-40 | CG55-65 | CG50-60 | CG75-85
CG115-25 | CG165-75 | CG195-205

CONTINENTAL GIRBAU®

High-Performance Drying Tumblers for On-Premise Laundries

Engineered for unmatched drying efficiency, programmability and ease-of-use, ProDry2+ Dryers deliver premium features that work in concert to dramatically increase laundry productivity, reduce linen wear and enhance drying quality.

ProDry2+ CG30-40 *up to 40lb capacity* | *ProDry2+ CG55-65* *up to 65lb capacity* | *ProDry2+ CG50-60* *up to 60lb capacity* | *ProDry2+ CG75-85* *up to 85lb capacity* | *ProDry2+ CG115-125* *up to 125lb capacity* | *ProDry2+ CG165-175* *up to 175-lb capacity* | *ProDry2+ CG195-205* *up to 205lb capacity*

Productivity & Efficiency Redefined

Dual Motors

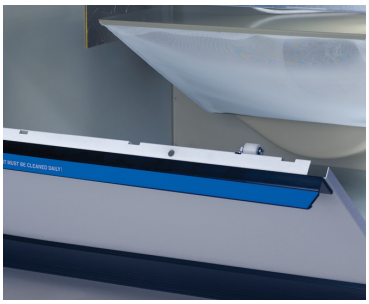

Oversized Lint Compartment

Quality, Standard Reversing & Efficiency

- Standard reversing improves quality and reduces roping and tangling, especially on large, bulky items — providing a more even dry
- The twin motors driven by OneDrive, an inverter motor control, combine to reduce start up time, require less amperage at ramp up, deliver precise speed control and lower noise levels.
- An instant electronic-spark ignition and modular electrical system contribute to reliability and easy servicing.
- A multiple-burner heat system efficiently and quickly reaches desired temperatures.
- An enclosed heat system captures intake air and preheats it before entering the tumbler — reducing energy costs without increasing dry time.

Cut Ownership Costs with ProDry2+

- Balanced drying time and BTU consumption reduce energy usage and labor costs.
- Simultaneously, they maximize laundry throughput by reducing dry cycle times to more closely match wash cycle times.

Easy Maintenance & Safety Features

- Self-cleaning lint screens support maximum airflow.
- Components are easily accessible.
- An automatic backdraft damper prevents outside air from entering the laundry.
- Oversized steel doors with reinforced metal door bars and hinges for superb ergonomics and durability.
- With a minimum rear clearance of 18 inches, safety guards and a fully enclosed rear area provide attendant protection.

Engineered for High Performance

Axial Airflow for Small-Load Efficiency *(CG30-40 & CG55-65 models)*

- Engineered with axial airflow, heated air is direct through the load from back to front.
- Perforated cylinders and drum lifters maximize airflow and tumbling action while also preventing tangling for fast, efficient drying.

Radial Airflow for Larger Loads *(CG50-60, CG75-85, CG115-125, CG165-175 & CG195-205 models)*

- Radial airflow ensures heated intake air is captured in the drum and evenly distributed throughout the cylinder.
- Radial airflow ensures maximum load separation for big loads and bulky items and utilizes the tumbler's complete capacity for quick, even drying.

Return to Committee Cover

Fire Sensing & Extinguishing

ISS Fire Sensing & Extinguishing

- The optional Integrated Sprinkler System (ISS), a sensing and extinguishing device that squelches dryer fires before they get out of control.
- ISS, which is available on gas and steam units, is always active — even after a load is complete — offering laundries added protection when a laundry is unattended.

Innovative Technology & Control Flexibility

ProDry2 Dryers offer two programmable controls — the Dual Digital Control or the Premier Plus Microprocessor Control.

Dual Digital Control *(30- to 85-pound models)*

- Simple to use, efficient and reliable.
- Allows the operator to choose temperature selection and cycle time and a single push to start operation.

Premier Plus Microprocessor Control *(all models)*

- Features a clear, prominent display that's glove friendly and durable.
- Offers up to 20 programmable cycles and reversing as a cycle add-on. The control also features:
  - Reminder to clean the lint screen
  - Anti-wrinkle and extended tumble initiates unheated tumble action after the end-of-cycle signal
  - External end-of-cycle output to aid operators in noticing when a load is complete
  - Programmable reversing and rotation time
  - Rapid advance option
  - Auditing on LED display
  - Time-dry, auto-dry and moisture sensing

Dual Digital Control

Microprocessor Control

Moisture Sensing Technology

- A Linen Life Extension (LLE) moisture sensing system prevents over drying and damage to fabrics.
  - It targets any dryness level from zero to 40 percent, and to ensure accurate moisture readings, the LLE system provides an extremely large load-to-surface contact area.
  - Unlike some moisture sensing systems available, Continental's LLE system uses the entire surface area of the lifters within the dryer cylinder as sensors.
    - 20 programmable cycles
    - 12 programmable dryness levels from zero to 40 percent
    - Programmable heat time
    - Dry goods experience less damage with up to 31 percent less fiber loss

Unmatched Durability

- The tumblers feature rugged stainless steel cylinders; twin motors powered by OneDrive, steel front, side and top panels coated inside and out with electrostatically applied, baked-on paint for superior bonding and corrosion resistance
- An all-belt drive system with cast iron pulleys and permanently sealed bearings provide quiet, low-maintenance operation
- Durable kick-plates and cart bumpers protect tumblers from nicks and scrapes.
- An exclusive annealed stainless steel backplate contributes to longer machine life and also reduces friction against tumbling laundry — extending linen life. (standard on all models except CG115-125, CG165-175 and CG195-205)
- Backed by an industry-leading warranty.

continentalgirbau.com • info@continentalgirbau.com • 800-256-1073
2500 State Road 44, Oshkosh, WI 54904

Return to Committee Cover

GIRBAU NORTH AMERICA

Standard Limited Warranty

Commercial Washer-Extractors

3-Yr. Limited Parts | 5-Yr. Key Component

Product Warranty for Commercial Washers

Models — E-Series, RMG-Series, REM-Series and HS-Series

Revised April 2021 (Starting Serial Number by Model Available Upon Request)

I. Warranty Coverage and Duration

Girbau North America, Inc. (GNA) extends this limited warranty to the original owner (Purchaser), or by factory authorized warranty transfer to a new owner of a Continental Girbau, Girbau Industrial, Sports Laundry or Poseidon Textile Care-branded washer-extractor (Equipment). GNA will repair or replace, free of charge, any part which fails as a result of a defect in material or workmanship for a period of three years (36 months) after the date of original installation, but no later than three-and-one-half years (42 months) from the manufacture date. However, if installation is not completed by an authorized GNA Distributor (Distributor), then two years (24 months) from the date of original installation, but no later than two-and-one-half years (30 months) from the manufacture date. Additionally, GNA will repair or replace, free of charge, the following if failure as a result of a defect in material or workmanship occurs:

- The inner cylinder (including coupler and shaft assembly), bearing and bearing seals, frame assembly (hardmount models only) and inner and outer frame assembly (softmount models only) for a period of five years (60 months) after the date of original installation, but no later than five-and-one-half years (66 months) from the manufacture date.
- For all new replacement parts, the remaining term of the limited warranty of the Equipment to which the parts are incorporated or one year (12 months) from the date of sale of the parts, whichever time period is greater.

If the date of installation of the Equipment cannot be determined, it shall be deemed to be 90 days after the date of sale by GNA.

II. Warranty Exclusions

- GNA will not provide for the replacement of fuses.
- GNA will not provide replacement of any part which fails for reasons other than defective material or workmanship. (Ex: misuse, improper installation, transportation damage, etc.)
- GNA will not honor this warranty for Equipment parts which have been altered without the written consent of GNA.
- GNA will not honor this warranty if machines are mounted on bases not supplied or approved in writing by GNA.
- GNA will not honor this warranty if parts from another manufacturer or parts not purchased through GNA have been incorporated on the Equipment.
- GNA is not responsible for:
  - labor, freight or transportation costs incurred in the replacement of any part.
  - clothing or machine damage caused by foreign objects placed in unit.
  - any consequential damage resulting from any malfunction.
  - any Equipment or part failure if such failure is due to an act of God, natural disaster, vandalism, intentional infliction of damage or dereliction.
  - loss of use, lost time or profits due to delay in repair or replacement of defective parts.

III. How to Obtain Replacement Equipment or Parts Under the Limited Warranty

For warranty service, Purchaser shall contact the GNA distributor (Distributor) from which the Equipment or part was originally purchased or the nearest Distributor. In the event that the Purchaser is unable to make contact with a Distributor, the Purchaser shall contact GNA directly at the contact points set forth below. Proof of purchase, model number, serial number and the defective part are required in order to exercise Purchaser's rights under this limited warranty. GNA shall have the discretion to require the return of defective parts, however, no parts shall be returned to GNA without GNA's prior written direction. The determination by GNA not to require the return of defective parts shall not be deemed to constitute a waiver of this warranty or of GNA's right to enforce all of the terms of this warranty thereafter.

Important: Consult your authorized Distributor regarding the applicability, if any, of warranty coverage to you.

THIS WARRANTY IS EXCLUSIVE AND EXPRESSLY IN LIEU OF ALL OTHER WARRANTIES EXPRESS OR IMPLIED, INCLUDING THE WARRANTIES OF MERCHANTABILITY AND FITNESS FOR USE AND ALL OTHER OBLIGATIONS OR LIABILITIES IMPLIED BY OPERATION OF LAW. GNA NEITHER ASSUMES NOR AUTHORIZES ANY OTHER PERSON TO ASSUME FOR GNA ANY OTHER LIABILITY IN CONNECTION WITH THE SALE OF THE EQUIPMENT OR PARTS. THE REMEDIES PROVIDED IN THIS LIMITED WARRANTY ARE EXCLUSIVE AND PURCHASER HEREBY WAIVES ALL OTHER REMEDIES, EXPRESS OR IMPLIED BY LAW, INCLUDING WITHOUT LIMITATION, ANY AND ALL INCIDENTAL DAMAGES AND CONSEQUENTIAL DAMAGES, WHETHER OR NOT OCCASIONED BY GNA'S NEGLIGENCE. THIS WARRANTY SHALL NOT BE EXTENDED, ALTERED OR VARIED EXCEPT UPON THE PRIOR WRITTEN INSTRUMENT EXECUTED BY AN AUTHORIZED GNA REPRESENTATIVE.

Girbau North America brands covered under this limited warranty are:

CONTINENTAL GIRBAU® | GIRBAU INDUSTRIAL® | SPORTS LAUNDRY SYSTEMS® ATHLETIC LAUNDRY SOLUTIONS | POSEIDON TEXTILE CARE SYSTEMS®

gnalaundry.com • 800-256-1073 • 2500 State Road 44 • Oshkosh, WI 54904

Return to Committee Cover

© 2021 Girbau North America Form No. W-AW-3-5YR 06/21

EXHIBIT C: INVITATION TO BID FORM

HAMBLEN COUNTY GOVERNMENT
Invitation to Bid – 2022 Laundry Equipment for Hamblen County Justice Center (2022-16)

INVITATION TO BID

Office of the Hamblen County Mayor
511 West Second North Street
Morristown, TN 37814

ITB TIMELINE: Times listed below are in local time.

Date Issued:	Friday, April 29, 2022
ITB Title:	2022 Laundry Equipment for Hamblen County Justice Center (2022-16)
ITB Question Deadline:	Monday, May 16, 2022 @ 2:00p.m. *All correspondence and communication must be via email to the designated Hamblen County point of contact listed on page 6. Questions submitted by telephone call will not be answered. Questions submitted after this deadline will not be answered.*
ITB Answer Deadline:	Wednesday, May 18, 2022 @ 4:00p.m.
Bid Submission Deadline Date & Time:	Friday, May 27, 2022 @ 3:00p.m. *If the Hamblen County Courthouse is closed for business at the time scheduled for proposal opening, for whatever reason, proposals will be accepted and opened on the next business day of the County, at the originally scheduled hour.*
Bid Submission Opening Location:	Hamblen County Courthouse, West Wing Conference Room, 1st Floor, Administrative Building
Contract Award:	June 24, 2022

Bidder Initials _____

Return to Committee Cover

INTRODUCTION:

Hamblen County (hereafter referred to as "County") is soliciting sealed, competitive bids for laundry equipment for the Justice Center (Architect's Project Number 590418) currently under construction. The items should be based on the specifications listed in this document.

The County's selection process will be based on compatibility with the specifications, delivery time and competitiveness of proposed fees.

TABLE OF CONTENTS:

I. Specifications

II. General Contractor's Project Schedule

III. General Information

IV. Submission Requirements

V. Forms:
   a. Bid Form
   b. Exceptions Form
   c. Anti-Collusion Statement
   d. Certification of Compliance Iran Divestment Act

VI. ITB Submission Checklist

Bidder Initials _____

I. SPECIFICATIONS – Section 114000 Laundry Equipment:

- Shop drawings and product data to be included.
- Close out documents and warranties to be furnished.
- Bid submissions for Laundry Equipment must include furnishing, unloading and setting in place for final use.
- Must include all necessary trim, sealants, accessories for the complete installation and training.

General

1.1 Related Documents

- A. The general provisions of the contract including general and supplementary conditions and general requirements apply to the work specified in this section.

1.2 The following work will be done by other vendors.

- A. Plumbing: Refer to Division 22, including:
  - 1. Rough-in piping for gas and water supply and waste lines.
  - 2. Piping for supply and waste lines.
  - 3. Traps, grease traps, line strainers, tail pieces, valves, stops, shut-offs and miscellaneous fittings required for complete installation.
  - 4. Final connections.
- B. Electrical: Refer to Division 26, including:
  - 1. Rough-in conduit, wiring, line and disconnect switches, safety cut-offs and fittings, control panels, fuses, boxes and fittings required for complete installation.
  - 2. Final connections, including mounting and wiring of switches furnished as part of the laundry equipment (unless otherwise indicated on the drawings).

1.3 WORK INCLUDED THIS SECTION:

- A. Furnish and install all laundry equipment as specified herein, including that which is reasonably inferred, with all related items necessary to complete work shown on contract drawings and/or required by these specifications.

Bidder Initials _____

ITEM 61 WASHER/EXTRACTOR, 55 LB. QUANTITY AS SCHEDULED

Provide soft-mount Washer-Extractor with the following features:

- A. 99 programming options.
- B. Slanted accessible control panel
- C. Stainless steel front, top and side panels.
- D. Stainless steel inner drum and tub.
- E. Large drain valve.
- F. High-capacity water inlets.
- G. Four (4) compartment dispenser.
- H. Eight (8) liquid chemical connections.
- I. Thirteen (13) chemical ports of various sizes including 1/2" manifold flush connections.
- J. Large door opening.
- K. Ozone-compatible design
- L. Durable micro-v belt.
- M. Voltage as scheduled, direction connection.
- Washer-Extractor to be as manufactured by Unimac, Model UY55, Continental, Speed Queen or exact equivalent.

ITEM 62 TUMBLE DRYER, 75 LB. QUANTITY AS SCHEDULED

Provide dryer with the following features:

- A. Standard air flow, 8” dia. maximum vent size.
- B. Multiple burner heat system provide quick, stable temperature control.
- C. Electrostatically applied paint for exterior finish.
- D. Self-cleaning lint filter.
- E. Galvanized pre-coated steel cylinder.
- F. Embossed steel front and side panels.
- G. Reversing cylinder option.
- H. Solid steel cap over top of dryer.
- I. Extended tumble to prevent wrinkling.
- J. Long-lasting 7/8" heavy duty rubber door gasket.
- K. Voltage as scheduled, direct connection.
- Dryer to be as manufactured by Unimac, Model UT-75, Continental, Speed Queen or exact equivalent.

Bidder Initials _____

ITEM 66 COMMERCIAL WASHER, 16 LBS. QUANTITY AS SCHEDULED

Provide small chassis washer with the following features:

- A. 16 lb. capacity, 3.26 cubic feet wash basket.
- B. Safety door interlock.
- C. Vibration safety shut off.
- D. Manual controls.
- E. Top load model.
- F. Multi-speed drive motor wired as scheduled, direct connection.
- G. Manufacturers standard finishes, white.
- Washer to be as manufactured by Unimac, Model UWNMN25115CW01, Continental Speed Queen or exact equivalent.

ITEM 67 Commercial, Dryer, 18 LBS. QUANTITY AS SCHEDULED

Provide small chassis dryer with the following features:

- A. 18 lb. capacity, 7.0 cubic feet cylinder, front loading.
- B. Manufacturer's standard finishes.
- C. Electrical characteristics as scheduled, direct connection.
- D. Rear control.
- E. Motors wired for 120/208/1 phase operation.
- F. 4" diameter exhaust, 220 CFM.
- G. Gas: Field verify type
- Dryer to be as manufactured by Unimac, Model UDEMNRG173CW01, Continental, Speed Queen or exact equivalent.

II. GENERAL CONTRACTOR'S PROJECT SCHEDULE:

Approximately four weeks after award, provide plumbing and electrical submittal information plus information on extractor foundation requirements.

Approximately six to eight weeks after award, provide the balance of the required submittals.

Approximately December 2023 and/or January 2024, set laundry equipment.

Bidder Initials _____

III. GENERAL INFORMATION:

Project Administrator:

The County Finance Department is the sole point of contact for this procurement. All communication between prospective bidders and the County upon receipt of this ITB shall be in email form to the County Finance Department as follows:

Johnna Harrell
511 West Second North Street
Morristown, TN 37814
Telephone: 423-586-1931
Email: Johnna.harrell@co.hamblen.tn.us

Any other communication will be considered unofficial and non-binding on the County. Communication directed to parties other than the County Finance Department may result in disqualification of the prospective proposer.

ITB Questions and Answers:

Questions regarding this ITB will be accepted via email to the Project Administrator until 2:00p.m. Monday, May 16, 2022. Questions submitted by telephone call will not be answered. Questions submitted after this deadline will not be answered.

Questions *and* Answers will be posted to the Hamblen County Government website, www.hamblencountytn.gov, under the Bids & Proposals Tab no later than 4:00p.m., Wednesday, May 18, 2022.

Proprietary Information and Public Disclosure:

Materials submitted in response to this competitive procurement shall become the property of Hamblen County. All bids submitted will remain sealed until the deadline for submission of bids has expired. Once a bid is submitted to Hamblen County Government and is opened, it constitutes a public record and is subject to the open records request pursuant to the Tennessee Open Records Act.

Cost of Bid Submission:

The County will not be liable for any costs incurred by any respondent in preparation of a response to this ITB, in conducting of a presentation, or any other activities related to responding to this ITB.

Bidder Initials _____

Revisions to the ITB:

In the event it becomes necessary to revise any part of this ITB, addenda will be produced in writing and submitted to all prospective respondents known to the County and will be listed on the Hamblen County website, www.hamblencountytn.gov, under the Bids and Proposals Tab. All addenda issued must be signed and included with the bid submission.

The County reserves the right to cancel or to reissue this ITB in whole or in part prior to the execution of a contract.

Period of Performance:

The period of performance of any contract resulting from this ITB is tentatively scheduled to begin upon award of a contract.

Contract Terms:

All items in this ITB must be included with the bid submission. All contracts between parties as a result of this ITB shall be governed by and enforced in accordance with the laws of the State of Tennessee. In the event a dispute arises, the venue shall be in Hamblen County, Tennessee. The County shall require the person with authority to bind the company to sign all agreement(s) with the County.

Contract Termination:

The County reserves the right to cancel the contract at any time for breach of contractual obligations without penalty or recourse by giving the contracted firm a written notice of such termination of at least thirty (30) calendar days prior to said cancellation. Prior to issuing such a notice, the County will, if appropriate, provide the contracted firm with an opportunity to cure the breach within a reasonable period of time. Should the County exercise its right to terminate the contract for such reasons, the termination shall become effective on the date as specified in the notice of termination sent to the contracted firm. The contracted firm shall be entitled to receive just and equitable compensation for the work provided pursuant to the contract prior to the effective date of cancellation.

No Obligation Contract:

The County reserves the right to accept or reject any or all bid submissions at its sole discretion without penalty and to not issue a contract as a result of this ITB. The County also has the right to waive any formal defects in submissions when deemed in the best interest of the County. Further, the County reserves the right to negotiate with any respondent concerning matters which the County determines require clarification or changes not in conformity with the specific requirements set forth herein.

Bidder Initials _____

Right To Withdraw:

Respondents have the right to request a withdrawal of their proposals from consideration due to error by giving notice at any time before and not later than two (2) days after submissions are publicly opened.

Commitment of Funds:

The Hamblen County Legislative Body are the only individuals who may legally commit the County to the expenditures of funds for a contract resulting from this ITB. No cost chargeable to the proposed contract may be incurred before receipt of a fully executed contract and/or County-issued purchase order. Obligations on contracts that envision extended funding through successive fiscal periods shall be contingent upon actual appropriations for the following years.

Invoice Requirements:

The County will pay one (1) invoice for the cost proposed in the successful bid submission. Payments will be made within fifteen (15) days after product training is complete.

The contracted firm will submit an invoice to the County Finance Department for the contracted amount. The invoice will include the following:

1. Purchase order number assigned by the County;
2. A description of the product delivered and installed; and
3. The date(s) the product was delivered, installed and training completed.

IV. SUBMISSION REQUIREMENTS:

Respondents are required to submit one (1) complete packet either electronically or in a sealed envelope based on the instructions below. Bids, whether mailed, hand-delivered or electronically submitted must arrive no later than 3:00p.m. local time on Friday, May 27, 2022.

Instructions for Submitting Bids Electronically:

Electronic submission should be sent to Johnna.harrell@co.hamblen.tn.us via WeTransfer.com, an internet-based computer file transfer service. The message line of the WeTransfer page must state: **2022 LAUNDRY EQUIPMENT FOR HAMBLEN COUNTY JUSTICE CENTER ITB#2022-16, MAY 27, 2022 @3:00P.M.** Please note: Bids should be submitted no earlier than May 21, 2022 as the documents are only available for download for seven (7) days and we cannot access them for any reason prior to Friday, May 27, 2022 @ 3:00p.m.

Bidder Initials _____

Instructions for Submitting Hard Copies of Bids:

Envelopes **must** arrive **sealed** and clearly **marked** with **2022 LAUNDRY EQUIPMENT FOR HAMBLEN COUNTY JUSTICE CENTER ITB#2022-16 MAY 27, 2022 @ 3:00P.M.** on the outside of the envelope to the Hamblen County Mayor's Office, 511 West Second North Street, Morristown, TN 37814, Attention: Johnna Harrell.

Respondents assume the risk for the method of delivery chosen. The County assumes no responsibility for delays caused by any delivery service whether in-person or electronically. Late proposals will **not** be accepted.

Submission Content:

All items listed below **must** be included in your submission.

1. Bid Form (included)
2. Exceptions Form (included)
3. Anti-Collusion Statement (included)
4. Certificate of Compliance with Iran Divestment Act (included)
5. Any addenda issued

Bid Form:

The respondent must complete the bid form on page 11 of this document. This includes the respondent's contact information and proposed cost.

Exceptions Form:

The exceptions form listed on page 12 of this document give options of "NO EXCEPTIONS TAKEN" **or** "BIDDER TAKES EXCEPTIONS'. One of these should be selected and submitted with the sealed bid.

If a bidder **has** exceptions to the scope of services listed in this document, they must be listed on the exceptions form on page 12 of this document.

If the bidder **has no** exceptions to the scope of services listed in this document, they should indicate so by selecting, "NO EXCEPTIONS ARE TAKEN" on the exceptions form on page 12 of this document.

Anti-Collusion Statement:

The respondent certifies by signing the anti-collusion statement on page 13 of this ITB that this proposal is made without prior understanding, agreement, or accord with any other person submitting proposals for the same service and that this submission is in all respects bona fide, fair and not the result of any act of fraud or collusion with another person engaged in the same line of business or commerce.

Bidder Initials _____

Iran Divestment Act:

The respondent must certify on page 14 of this ITB that neither they nor any of their successors, parent companies, subsidiaries or companies under common ownership or control certifies, under penalty of perjury, that to the best of their knowledge and belief that they are not on the list created pursuant to Tennessee Code Annotated § 12-12-106.

Signatures:

The Exceptions Form, Anti-Collusion Statement, Certification of Compliance with the Iran Divestment Act, and all ITB Amendments must be signed and dated by a person authorized to legally bind the respondent to a contractual relationship.

Bidder Initials _____

V. FORMS:

a) BID FORM:

Information of company or individual with whom the contract would be written	
Company Legal Name:	
Address:	
Phone:	
Primary Point-of-Contact Email Address:	
How long are quotes guaranteed for?	

Quote for Justice Center Laundry Equipment. Please quote each item on a per unit basis and based on specifications listed in this document.
If a separate sheet is needed for quoting, please note "Bid Form – Quote Section" at the top.

Item	Manufacturer	Model	Cost
Washer/Extractor 55lb.			$
Tumble Dryer 75lb.			$
Commercial Washer 16lb,			$
Commercial Dryer 18lb.			$
Warranty Information:			
Grand Total: Including equipment, trim, sealants, and accessories needed for complete installation. Includes unloading, setting in place for final use and training.			$

Bidder Initials _____

b) EXCEPTIONS FORM

Bidder MUST sign the appropriate statement below, as applicable.

☐ Bidder understands and agrees to all terms, conditions, requirements and specifications stated herein. NO EXCEPTIONS ARE TAKEN.

FIRM NAME:	
AUTHORIZED REPRESENTATIVE: (printed)	
AUTHORIZED REPRESENTATIVE: (signature)	
DATE:	

☐ Bidder takes exception to the following terms, conditions, requirements and specifications stated herein.

FIRM NAME:	
AUTHORIZED REPRESENTATIVE: (printed)	
AUTHORIZED REPRESENTATIVE: (signature)	
DATE:	
EXCEPTIONS TO NOTE:	

Bidder Initials _____

c) ANTI-COLLUSION STATEMENT

By signing this form the respondent agrees that he/she has not divulged to, discussed, or compared his/her submission with other respondents and has not colluded with any other respondent whatsoever. Note: no premiums, rebates or gratuities to any employee or agent are permitted with, prior to, or after any delivery of service. Any such violation will result in any contract related to this ITB being null and void and could constitute a felony and result in a fine, imprisonment and civil damages.

The undersigned certifies that he/she has read, understands, and agrees to all terms, conditions, and requirements of this ITB, and is authorized to enter into a contract with Hamblen County Government. This form must be signed personally by the respondent or the respondent's authorized agent. All signatures must be original.

_____	_____
Signature	Title
_____	_____
Printed Name	Date

By signing this form, the respondent signifies understanding and agreement with Hamblen County Government's Terms and Conditions.

Bidder Initials _____

d) CERTIFICATION OF COMPLIANCE WITH IRAN DIVESTMENT ACT
Tenn. Code Ann. § 12-12-101 et seq.

Comes _____, for and on behalf of
(Printed name of Principal Officer of Company)

_____, (the "Company") and, after being duly authorized by the Company so to do, makes oath that:

By submission of these qualifications, each respondent certifies, and in the case of a joint submission each party certifies, under penalty of perjury, that to the best of their knowledge and belief that each respondent is not on the list created pursuant to the Iran Divestment Act, Tenn. Code Ann. § 12-12-106.

_____
Signature

_____
Title

_____
Date

Bidder Initials _____

VI. ITB SUBMISSION CHECKLIST:

- ☐ Submission is labeled on the outside of the envelope or in the subject line, if electronically submitted, '2022 LAUNDRY EQUIPMENT FOR HAMBLEN COUNTY JUSTICE CENTER ITB#2022-16, MAY 27, 2022 @ 3:00p.m. as instructed on pages 8 & 9 Section IV of this document
- ☐ Bid Form completed (pages 11 Section V.a. of this document)
- ☐ Exceptions Form completed and signed (page 12 Section V.b. of this document)
- ☐ Anti-Collusion Statement Signed (page 13 Section V.c. of this document)
- ☐ Certification of Compliance with Iran Divestment Act completed and signed (page 14 Section V.d. of this document)
- ☐ Signed Addenda (if applicable)

Bidder Initials _____

TENNESSEE
Hamblen County
SERVICE · COMMUNITY · INDUSTRY
OFFICE OF THE MAYOR

To: Hamblen County Commissioners

From: Bill Brittain, County Mayor BB

Date: June 6, 2022

Re: Body Scanner Purchase with Opioid Settlement Funds

The Hamblen County Jail wants to purchase a body scanner with some of the funds received from the Endo Pharmaceutical Opioid Settlement. The total cost for the body scanner and five (5) years of additional warranty is $176,500. We are not required to bid the scanner purchase based on the sole source or proprietary purchase clause located in our purchasing policies and procedures, section III.a.v.

The body scanner will help the jail staff keep drugs and other contraband from being smuggled into the jail. The same body scanner is currently being used in Claiborne and Blount County jails. This machine will be moved to the new jail when it is complete.

Bill Brittain, *County Mayor*
511 West Second North Street • Morristown, TN 37814 • *office.* 423.586.1931 • *fax.* 423.585.4699
www.HamblenCountyTN.gov • *email.* bbrittain@co.hamblen.tn.us

May 11, 2022

Capt T Laws
Hamblen County SO TN
510 Allison Street
Morristown, TN 37814

Dear Capt. Laws,

We the undersigned, hereby affirm that the Intercept Whole Body Contraband Detection Scanner is a product of Tek84, Security Product Line.

The Intercept Scanner is uniquely designed, and the following features are exclusive to the product. There are no other whole body contraband detection systems in marketplace production that can meet these combined specifications.

1. **Vertical Scanning -** The Intercept Scanner is the only whole-body scanner that uses an X-ray beam that images below the subject's feet to above their head with generator and detector array motioning vertically in tandem, scanning on a horizontal plane to assure accurate proportional imaging, no magnification or distortion, and not requiring the subject to move on a platform or conveyer belt during the imaging process.
2. **Small footprint -** The Intercept Scanner is the only whole-body scanner that has the ultra-compact 34" x 72" footprint design.
3. **Exclusion Zone equal to the device footprint -** The Intercept Scanner is the only whole-body scanner that has an exclusion zone equal to the 34" x 72" footprint.
4. **Waterproof -** The Intercept Scanner is the only whole-body scanner that is proven waterproof up to four inches of height from the ground.
5. **Dual Vertical Wall Technology -** The Intercept Scanner is the only whole-body scanner with Dual Virtual Wall Technology to assure that the subject is standing in the correct position while being scanned in order to minimize radiation dose as per ANSI/HPS N43.17-2009.
6. **Complete Scan Report -** The Intercept Scanner is the only whole-body scanner that provides a photo, 3 images, scan#, name, time date stamp, comment, unit name, institution name, JMS #, Operator embedded on jpg for evidentiary purposes.
7. **Transportable -** The Intercept Scanner is transportable. Because it is not permanently anchored to the floor and has built-in wheels, it can be moved to another location.
8. **Quick -** The Intercept Scanner has a 4 second scan time.
9. **Integrated Thermal Scanner -** The Intercept is the only whole-body scanner with an optional integrated thermal scanner with embedded record keeping.

Tek84 is the only manufacturer of the Intercept and the only manufacturer of a device that combines these listed features.

The Intercept has at least four current patents (First patent # 10481295).

The Intercept Whole Body Contraband Detection System routinely utilizes a low imaging dose of 0.25 uSv per scan that adheres to the ALARA (As Low As Reasonably Achievable) Concept outlined in the American National Standard (ANSI/HPS) Regulations N43.17-2009.

Tek84 Engineering products are 100% developed and assembled in the USA.

Sincerely,

Kent Smart
Vice President Domestic Sales
925-548-4550

Quote

May 11, 2022

Capt Teresa Laws
Hamblen County Sheriff's Office
510 Allison Street
Morristown, TN 37814
423-231-1172
tlaws@co.hamblen.tn.us

QUO# 2022-05-08

Please see the quotation below for the Tek84 Intercept Body Scanner. The scanner includes all that is listed below as well as (1) built in camera to include a photo of the subject with each scan (2) Your agency's logo on the scanner as well as on each scan report. (3) Training by a medical professional on the use of the product, required radiation training and expert training on reading the scan results. (4) A one-time grab or your JMS database to upload the current list of subjects currently and previously in your facility.

Qty	Part Number	Description	Net Each	Ext Price	
1	SSD-017-1102	Tek84 Intercept Whole Body Security Scanning System	$ 139,000.00	$ 139,000.00	
		High Strength Aluminum Unibody Frame. 106Kv Monoblock Oil Cooled Generator. 34" X 72" X 90" (79" top removed) foot print. 4 Second Scan Time. Variable Scanning Dosage from 0.25 uSv to 2.0 uSv			
		Tethered Ethernet Connected Work Station with 27" Vertically Mounted Touch Screen Monitor. PC with Win OS and (2) 1 TB HDD. RAID. 1 million image storage capacity. Transportable on Built in Heavy Duty Caster System. Corner Mounting Feet. 16 million Grey Scale Levels. 110 V/60hz. 1Kva			
1	INT-Shipping	Freight from San Diego, CA to Morristown, TN 37814	Included	$ -	
1	INT-WARRANTY	Initial One (1) Year Parts and Labor on Entire System from Time of Delivery	Included	$ -	
1	INT-Training	2.5 days Formal, classroom, on-site	Included	$ -	
		OPTIONAL			
0	INT-PN 13282	Bundled ICI Thermal Scanner - For Temperature Scanning	$ 20,000.00	$ Not Needed	Initial____
0	INT-EXT-WAR	Years of Additional Warranty Starting Month 13	$ 7,500.00	$ -	Initial____ # yrs 5 = 37,500
		Total		**$ 139,000.00**	**

** Up to Five Additional years of addition warranty can be purchased. (Indicate as necessary)

$139,000.00
Plus 37,500.00
TOTAL: $176,500.00

By execution of this agreement, by an authorized signature, the customer agrees to purchase the products specified subject to the terms and conditions set forth in the agreement and subject to Tek84 and conditions available at www.Tek84.com.

This quote will expire on: July 10, 2022
Delivered-at-place: Morristown, TN 37814
Terms: Net 30
Taxes: Circle one Exemption certificate attached Tax rate provided here:
*if taxes apply, please request updated quote

Accepted By:

Printed Name and Title:_____

Authorized Signature_____

Date_____

Prepared by:

Margo McNeely, Regional Sales Manager

5/11/2022

RESOLUTION 22-____

A RESOLUTION AUTHORIZING HAMBLEN COUNTY TO INCREASE THE THRESHOLD REQUIRED FOR SEALED COMPETITIVE BIDS AND PROPOSALS

WHEREAS, the Tennessee State Legislature in regular session for the year 2022, passed Public Chapter No. 1016 which amends TCA § 12-3-1212 by increasing the threshold over which public advertisement and sealed competitive bids or proposals are required for nonemergency, nonproprietary purchases for local governments having non-centralized purchasing authority; and

WHEREAS, Hamblen County as a local government having non-centralized purchasing authority wishes to increase their bidding threshold to comply with amended TCA § 12-3-1212 to an amount not to exceed twenty-five thousand dollars ($25,000); and

WHEREAS, Hamblen County has established purchasing policies and procedures which shall be updated to reflect this change including requiring that three (3) written quotations be obtained when possible for purchases less than the bid threshold but more than forty percent (40%) of such bid threshold. Purchases of like items must be aggregated for purposes of the bid threshold;

THEREFORE, BE IT RESOLVED that the Hamblen County Legislative Body authorizes Hamblen County's competitive sealed bid limit be changed to comply with the amended TCA §12-3-1212 and set at twenty-five thousand dollars ($25,000).

Duly passed and approved this 23rd day of June 2022.

APPROVED: _____
Chairman
Hamblen County Legislative Body

APPROVED: _____
Bill Brittain, County Mayor

ATTEST: _____
Penny Petty, County Clerk

Hamblen County, Tennessee Bid Tabulation

Bid Name:	**New, Non-Refurbished Personal Computers (2022-19)**	**Bid Advertisement:**	**Citizen Tribune Newspaper - Public Notice** **Citizen Tribune Newspaper (online) - Public Notice** **Hamblen County Government Website** **Emailed 45 Vendors**
Department:	**IT**		
Date Bids Opened:	**6/3/2022 @ 2:00p.m.**		
Co. Commission Review:	**6/23/2022**		

	Vendors Bidding	
Item Detail	**Technology Express** **Kingston, TN**	**SHI International** **Somerset, NJ**
Standard Configuration: Dell Optiplex 3000 Series Small Form Factor or Micro Form Factor or Equivalent	***Form Factor Quoted*** Micro Form Factor	***Form Factor Quoted*** Not Specified
Total Cost for Standard Configuration PC:	**$807.88**	**$1,111.59**
Power Configuration: Dell Optiplex 5000 Series Small Form Factor or Equivalent		
Total Cost for Power Configuration PC:	**$1,079.98**	**$1,471.86**
Notebook: Dell Latitude 3000 Series 15.6" Notebook or Equivalent		
Total Cost for Notebook:	**$793.44**	**$1,039.17**
Accessories:		
Monitor - Dell E2422H or Equivalent	**$162.73**	**$225.76**
Dock/Port Replicator - Dell Dock WD19 or Equivalent	**$256.81**	**$353.09**
Keyboard/Mouse - Dell KM5221W Wireless Desktop Keyboard & Mouse or Equivalent	**$52.15**	**$52.17**
Mount - Dell Optiplex Micro All-in-One Mount for E-Series Monitors or Equivalent	**$46.79**	**$43.47**

Recommendation for Award: Technology Express - A) Low bid; B) Meets specifications needed

HomeTrust Bank
Since 1926

Scotty Long
Hamblen County Trustee
Hamblen County Courthouse
511 W. Second North Street
Morristown, TN 37814

May 18, 2022

Dear Scotty,

We are delighted to have been carefully chosen as the financial partner for the office of Hamblen County Trustee. We appreciate the opportunity to provide you with a four-year contract effective July 1, 2022, and to provide banking services for our Hamblen County Trustee. We strongly believe that we are uniquely positioned to offer you the best value, with a personal touch. This letter is to confirm that we stand by the terms and conditions outlined by the Request for Proposal dated April 3, 2022, and our response. We agree that either party can terminate this contract with thirty (30) days' notice. Please let us know if you have any questions. We look forward to working with you and continuing this relationship.

Sincerely,

Jessica Rich

Jessica Rich, VP
County Executive
HomeTrust Bank

Michael Paradis

Michael Paradis, VP, CTP
Treasury Services Sales Officer
HomeTrust Bank

120 Evans Ave.
Morristown, TN 37814
423.586.8421 p
423.581.5134 f

123 Merchants Greene Blvd.
Morristown, TN 37814
423.714.1655 p
423.714.1699 f

htb.com

Scotty Long
HAMBLEN COUNTY TRUSTEE

Hamblen County Courthouse
511 W. Second North Street
Morristown, TN 37814

Phone (423) 586-6290

April 3, 2022

HomeTrust Bank
Attn: Jessica Rich, County Executive
120 Evans Avenue
Morristown, TN 37814

Dear Jessica,

Hamblen County Trustee's office is accepting competitive proposals for consideration in awarding the Hamblen County Trustee's checking account services. Enclosed you will find "Instructions for Submitting Proposal For Trustee's Checking Account Services" as well as the form "Proposal to Service the Hamblen County Trustee's Checking Account" that must be completed and signed. Proposals must be received by the Trustee's office no later than 4:30 PM on Wednesday, May 6, 2022 for opening at 10:00 AM on Thursday, May 7, 2022. We will follow up with each Banking Institution once all of the bids have been evaluated. Hamblen County Government has the right to accept or reject any and all bids. Proposal must be in a sealed envelope marked "Proposal to Service the Hamblen County Trustee's Checking Account" and addressed to:

HAMBLEN COUNTY GOVERNMENT
Attn. Jill Margelowsky
511 W 2nd North Street
Morristown, TN 37814

Please refer any questions to the following:
Scotty Long, Hamblen County Trustee at scotty.long@co.hamblen.tn.us or
Jill Margelowsky, Chief Deputy Trustee at jillm@co.hamblen.tn.us

On behalf of the Hamblen County Trustee's Office, thank you for your interest in working thru this bidding process.

Sincerely,

Scotty Long
Hamblen County Trustee

authorized official of the institution must be placed thereon. No other forms may be submitted.

3. Proposal must be in a sealed envelope marked "Proposal to Service the Hamblen County Trustee's Checking Account" and addressed to:

   HAMBLEN COUNTY TRUSTEE
   Attn. Jill Margelowsky
   511 West 2nd North Street
   Morristown, TN 37814

4. Proposals must be received by the Trustee's office no later than 4:30 PM on Wednesday, May 6, 2022.

5. The Trustee's checking account will consist of eighteen (18) separate checking accounts:

   a. Trustee's Account – with an ICS Depository (Sweep Account)
   b. Payroll Clearing Account
   c. AP Clearing Account
   d. Tax Payment Account
   e. Self-Insurance Funds Account
   f. Flex Medical Account
   g. ICS Bond Investment Account
   h. ICS General Investment Account
   i. ICS American Cares Act Investment Account

6. Hamblen County School Systems will need the following accounts

   a. School General Purpose Clearing
   b. Federal Projects Clearing Account
   c. Food Service Clearing Account (with multiple depositors) Deposit Slip Extension
   d. Food Nutrition Deposit Account
   e. Construction Account
   f. Tax Account
   g. Employee Insurance Account
   h. Online Payment Account
   i. TCRS 401K Account

PROPOSAL TO SERVICE THE HAMBLEN COUNTY TRUSTEE'S CHECKING ACCOUNT

TO: **HAMBLEN COUNTY GOVERNMENT**
Attn. Jill Margelowsky
511 West 2nd North Street
Morristown, TN 37814

FROM: HomeTrust Bank
Jessica Rich, County Executive
120 Evans Avenue
Morristown, TN 37814

The banking institution proposes to furnish the services indicated below for the Hamblen County Trustee's checking account for the period beginning July 1, 2022 and ending June 30, 2026.

1. **The interest rate paid will be based on the current short term rates available in the market place including but not limited to the Fed Funds Rate, 30-Day Average SOFR, and 90 day T-Bill.** We will pay .70%, based on a blend of current market rates, e.g., 91-Day T-Bill, Fed Funds, to be reviewed every three months in this rising rate environment.
   We will pay the (see above) **Rate. Plus** _____ **Minus** _____.

2. **As a basis for determining collected balances for Trustee's deposits before bank's cut-off time, all checks included in the deposit will be considered as collected funds.** Yes

3. **We will provide a maximum of 6 check scanners for remote depositing plus maintenance.** Yes

4. **We will provide online monthly statements (no printed statements) on each of the Trustee's accounts and the Hamblen County School Systems accounts (imaging copies will be accepted in lieu of cancelled checks, front and back required.)** Yes

5. **We will (Not) charge for services listed as follows, based on a non interest balance of** $4,800,000 **this number is based on a monthly average** 7,650 TM & General Banking **transactions in all of the 18 bank accounts combined. (Use the enclosed list provided for account average transactions.)**

Account Maintenance	$8.39
FDIC Insurance	IntraFi Per Account fee of $31.45
Items Paid (Debits)	$.08
Items Deposited (Credits)	$.23 Branch Deposit, $.05 check deposited, $.08 ACH
Deposit Books (General Trustee's Account) (2)	HomeTrust will cover half the cost.

On-line banking

HomeTrust Bank

Banking Institution

By: Jessica Rich

Title: County Executive

Date: May 4, 2022

The Trustee will write a check or do an electronic transfer out of the General Trustee's Account to cover debits in all the clearing accounts. Bank will provide on-line banking with options to transfer monies between accounts as well as transfer monies to outside accounts via ACH or wire, as well as other daily account administrative function capabilities. Bank will also provide 6 scanners to be used for remote deposit capture of paper checks, plus the online banking system will allow the Trustee to export deposit information via the internet for reconciliation.

7. The following additional checking accounts will also be required. Please note, all of the accounts below will need to have demand checking and/or electronic/wire credit and debit capabilities. Any other additional requirements will be noted.

   a. Register of Deeds Account
   b. Hamblen County Clerk

   *Deposits must be reconciled and posted to any and all accounts for the Hamblen County Trustee's Office by 8 a.m. of the following business day.

8. Successful bidder must be a member of the State of Tennessee Collateral Pool.

9. Questions regarding the submission of proposals should be directed to:

   Scotty Long, Trustee, scotty.long@co.hamblen.tn.us
   Jill Margelowsky, Chief Deputy Clerk, jillm@co.hamblen.tn.us

10. Hamblen County Government has the right to accept or reject any and all bids.

11. Contract between Bank and Hamblen County Trustee must contain a written 60 day cancellation clause for either party.

Line Item Description	January	February	March	April	May	June	July	August	Septembe	October	November	December	Average
Account Maintenance	24	24	24	24	24	24	24	24	24	24	24	24	24
Electronic Credits	68	62	78	77	73	72	74	89	72	76	69	67	73
Electronic Debits	6	6	9	9	10	10	11	8	8	9	6	5	8
Checks Paid	16	24	31	20	20	24	18	20	23	20	26	17	22
Deposits	42	42	53	47	45	49	46	49	46	44	41	44	46
Deposited Items	1653	1683	1944	1731	1578	1807	1945	1774	1707	1555	1760	1761	1742
Returned Deposited Items		2	3	3		1			1				1
Coin and Currency Deposited (000's)	146	327	185	53	56	29	203	250	244	391	303	292	207
Combined Item Transactions on Package A	2357	2131	2284	1456	1666	1736	1352	1864	2401	2506	2636	2573	2080
Paper Statement	1	1	1	1	1	1	1	1	1	1	1	1	1
Stop Payments										1		1	0
Information Reporting Maintenance (Per A	24	24	24	24	24	24	24	24	24	24	24	24	24
Wire Module	1	1	1	1	1	1	1	1	1	1	1	1	1
Domestic Wires**	4	4	4	4	4	4	4	4	4	4	4	4	4
ACH Disbursement Module (Per Account)	12	12	12	12	12	12	12	12	12	12	12	12	12
ACH Draft Module (Per Account)	2	2	2	2	2	2	2	2	2	2	2	2	2
ACH Per Item Originated	2236	2274	3657	2309	2473	3664	1372	2367	2398	2386	2446	4119	2642
Same Day ACH Per Item				1	1			2	5	2		1	1
ACH File Transmission**	31	31	31	31	31	31	31	31	31	31	31	31	31
ACH Notification of Change	5	8		8	8	7	7	10	11	7	7	11	7
ACH Returned Item		1		1			1	5	4		1	3	1
Account Transfer**	84	84	84	84	84	84	84	84	84	84	84	84	84
Remote Deposit Service							1	1	1	1	1	1	1
Remote Deposit, Deposited Items							44	111	170	2764	1171	1458	953
Check Positive Pay Maintenance					1	1	1	1	1	1	1	1	1
Check Positive Pay Per Item					19	6	6	3		8	2	4	6
Check Positive Pay Per Exception									2			15	2
Deposit Reconciliation Maintenance							1	1	1	1	1	1	1
ACH Positive Pay Maintenance					1	1	1	1	1	1	1	1	1
ACH Positive Pay Exceptions													0
Insured Cash Sweep Maintenance	3	3	3	3	3	3	3	3	3	3	3	3	3

*Combined Items include: Deposits, deposited items, checks paid/debits, online bill payments and electronic debits and credits. Remote Deposit Capture deposits and deposited items are NOT included in the combined items. There are 18 package accounts. Allocation of items across all pakcage accounts is estimated as: 9% branch deposits, 36% checks paid, 9% electronic credits, 4% electronic debits, 42% deposited items (branch).

**Average Per Month

Customer Name: Hamblen County Trustee, Cost Proposal

Since 1926

Services Rendered	Volume	Discounted Price		Total
Account Maintenance	24	8.39	$	201.25
Deposits	233	0.23	$	53.73
Deposited Items	2616	0.05	$	131.62
Checks Paid	771	0.08	$	58.19
ACH Debits	91	0.08	$	7.63
ACH Credits	260	0.08	$	21.80
Paper Statement	1	2.10	$	2.10
Cash Deposited and/or Exchanged (per $1,000)	207	0.73	$	151.88
Return Deposited Item - Charged at account level	1	4.19	$	4.19
Commercial Center (First Account)	1	6.29	$	6.29
Commercial Center, Prior Day Reporting	22	0.00	$	-
Commercial Center, Current Day Reporting	22	0.00	$	-
Commercial Center, Per Item Loaded	1355	0.00	$	-
ACH Disbursement, First Account	1	12.58	$	12.58
ACH Disbursement, Per Additional Account	11	0.00	$	-
ACH Draft Module, Per Additional Account	2	0.00	$	-
ACH Originated Items (Debit/Credit)	2642	0.05	$	132.93
ACH Per Transmission	31	0.00	$	-
ACH Returned Item	1	2.10	$	2.10
ACH Notification of Change (NOC)	7	1.26	$	8.80
Check Positive Pay Monthly Fee, Per Account	1	12.58	$	12.58
Per Issued Item	6	0.04	$	0.25
** Per Exception Item	2	1.05	$	2.10
ACH Positive Pay Monthly Fee, Per Account	1	10.48	$	10.48
Remote Deposit Capture Monthly Fee (Per ID, Not Per Account)	1	12.58	$	12.58
RDC Deposited Item	953	0.04	$	39.96
Deposit Reconciliation	1	10.48	$	10.48
Wire Services				
Domestic Outgoing (Commercial Center)	4	6.29	$	25.16
Account Transfers	84	0.00	$	-
Investment Sweep	3	31.45	$	94.34
Account Analysis Summary				
Gross Charges at Standard Price				$2,394.24
Less - Existing Client Discount				$1,391.24
Gross Charges After Discount			$	1,003.00
Explicit Charges				
Estimated Monthly Service Charge (Explicit + Net-Analyzed)			**$**	**1,003.00**
Offsetting Balance Requirement			**$**	**4,800,000.00**

BUDGET AMENDMENTS

HAMBLEN COUNTY DEPARTMENT OF EDUCATION

210 East Morris Boulevard
Morristown, Tennessee 37813
Phone (423) 586-7700 • Fax (423) 586-7747

The mission of Hamblen County Schools is to educate students so they can be challenged to successfully compete in their chosen fields.

DR. JEFF PERRY
Superintendent

BOARD OF EDUCATION

Shahin Assadnia

Carolyn Clawson

Joe Gibson, Jr.

Roger Greene

James Grigsby

Janice Haun

Clyde Kinder

AMENDMENT #7

2021-2022

The Hamblen County Board of Education requests approval from the Hamblen County Commission for Amendment #7 to the 2021-2022 General Purpose School Budget. This amendment is pending board approval on June 14, 2022.

On June 24, 2021, the Hamblen County Commission approved a General Purpose School Budget in the amount of $93,433,454.30. Amendment #1 increased the budget to $93,501,914.11. Amendment #2 increased the budget to $93,725,494.84. Amendment #3 increased the budget to $93,764,519.84. Amendment #4 increased the budget to $93,908,422.16. Amendment #5 increased the budget to $94,001,343.60. Amendment #6 increased the budget to $95,489,884.35. Amendment #7 does not change the total budget. It involves code changes only.

<u>This amendment does not affect the County's maintenance of effort.</u>

Jeff Perry, Superintendent of Schools

HAMBLEN COUNTY DEPARTMENT OF EDUCATION
2021-2022
Dr. Jeff Perry, Superintendent of Schools

GENERAL PURPOSE
AMENDMENT #7

HAMBLEN COUNTY SCHOOLS

GENERAL PURPOSE SCHOOL BUDGET - SUMMER CAMPS

2021-2022

AMENDMENT #7 - EXTERNAL

EXPENDITURE CODE	TITLE	BUDGET	INCREASE	DECREASE	AMENDED BUDGET	PURPOSE
71100-204	STATE RETIREMENT	$ 39,700.00	$ 3,750.00	$ -	$ 43,450.00	**SUMMER LEARNING CAMP**
71100-217	RETIREMENT - HYBRID STABILIZATION	$ 3,750.00	$ 3,900.00	$ -	$ 7,650.00	MOVING FUNDS TO ADD
71100-429	INSTRUCTIONAL SUPPLIES AND MATERIALS	$ 164,617.28	$ -	$ 17,391.00	$ 147,226.28	SECURITY FOR SUMMER CAMPS
						AND MOVING FUNDS TO INCREASE
72120-204	STATE RETIREMENT	$ 1,312.00	$ 123.00	$ -	$ 1,435.00	RETIREMENT BENEFIT AMOUNTS
72120-217	RETIREMENT - HYBRID STABILIZATION	$ 123.00	$ 153.00	$ -	$ 276.00	
72130-170	SCHOOL RESOURCE OFFICERS	$ -	$ 8,250.00	$ -	$ 8,250.00	
72130-201	SOCIAL SECURITY	$ -	$ 512.00	$ -	$ 512.00	
72130-204	STATE RETIREMENT	$ -	$ 578.00	$ -	$ 578.00	
72130-212	EMPLOYER MEDICARE	$ -	$ 125.00	$ -	$ 125.00	
71100-116	TEACHERS	$ 2,358.00	$ 64,592.00	$ -	$ 66,950.00	**SUMMER STREAM CAMP**
71100-163	EDUCATIONAL ASSISTANTS	$ 1,716.00	$ 4,184.00	$ -	$ 5,900.00	MOVING FUNDS TO PROVIDE
71100-201	SOCIAL SECURITY	$ 260.00	$ 4,390.00	$ -	$ 4,650.00	ADDITIONAL HOURS FOR SUMMER
71100-204	STATE RETIREMENT	$ 370.00	$ 6,990.00	$ -	$ 7,360.00	STREAM PORTION OF LEARNING
71100-212	EMPLOYER MEDICARE	$ 70.00	$ 995.00	$ -	$ 1,065.00	CAMPS
71100-217	RETIREMENT - HYBRID STABILIZATION	$ 35.00	$ 1,306.00	$ -	$ 1,341.00	
71100-429	INSTRUCTIONAL SUPPLIES AND MATERIALS	$ 183,317.22	$ -	$ 82,457.00	$ 100,860.22	
71100-204	STATE RETIREMENT	$ 13,719.00	$ 1,281.00	$ -	$ 15,000.00	**SUMMER BRIDGE CAMP**
71100-217	RETIREMENT - HYBRID STABILIZATION	$ 1,281.00	$ 1,519.00	$ -	$ 2,800.00	MOVING FUNDS TO INCREASE
71100-429	INSTRUCTIONAL SUPPLIES AND MATERIALS	$ 114,170.47	$ -	$ 2,855.00	$ 111,315.47	RETIREMENT BENEFIT AMOUNTS
72120-204	STATE RETIREMENT	$ 274.00	$ 26.00	$ -	$ 300.00	
72120-217	RETIREMENT - HYBRID STABILIZATION	$ 26.00	$ 29.00	$ -	$ 55.00	
	TOTALS	**$ 527,098.97**	**$ 102,703.00**	**$ 102,703.00**	**$ 527,098.97**	
	NET CHANGE		$ -			

TENNESSEE
Hamblen County
SERVICE • COMMUNITY • INDUSTRY
OFFICE OF THE MAYOR

Hamblen County Commission

For the June 2022 Commission Meeting

Fund	#101

DEPT: **Capital Projects**

Account Number	Description	Increase	Decrease
	INCREASE APPROPRIATIONS:		
91130.791	Other Construction	$ 325,000.00	
	DECREASE FUND BALANCE:		
39000.000	Unassigned Fund Balance		$ 325,000.00
		325,000	*325,000*

Brief Descriptions of issue:
To appropriate funds to construct the parking lot and for the demolition of the old maintenance building.

Signature: Bill Bunch
Title : County Mayor
Date: May 20, 2022

For Finance Department Only:
Reviewed by: _____
Budget Amendment: _____
Date: _____

TENNESSEE
Hamblen County
SERVICE • COMMUNITY • INDUSTRY
OFFICE OF THE MAYOR

Hamblen County Commission

For the June 2022 Commission Meeting

Fund	#101

DEPT: **Drug Court**

Account Number	Description	Increase	Increase
	INCREASE APPROPRIATIONS:		
53330.322	Evaluation and Testing	$ 1,120.00	
53330.435	Office Supplies	$ 3,789.39	
53330.499	Other Supplies and Materials	$ 2,705.61	
53330.524	In Service / Staff Development	$ 2,385.00	
	INCREASE REVENUE:		
46980.000	Other State Grants		$ 10,000.00
		10,000	*10,000*

Brief Descriptions of issue:
To increase appropriations and recognize revenue that will be received from the State Grant for Drug Courts. Funds are being used by Drug Recovery Court for participant housing/rent, supplies, and training.

Signature: J Harrell
Title : Accounting Assistant
Date: 5/20/2022

For Finance Department Only:
Reviewed by: _____
Budget Amendment: _____
Date: _____

TENNESSEE
Hamblen County
SERVICE • COMMUNITY • INDUSTRY
OFFICE OF THE MAYOR

Hamblen County Commission

For the June 2022 Commission Meeting

Fund	#101

DEPT: **Sheriff's Department**

Account Number	Description	Increase	Increase
	INCREASE APPROPRIATIONS:		
54110.115	Sergeants	$ 3,000.00	
54110.162	Clerical Personnel	$ 1,100.00	
54110.186	Longevity	$ 3,675.00	
54110.207	Medical Insurance	$ 6,000.00	
	DECREASE APPROPRIATIONS		
54110.187	Overtime		$ 13,775.00
		13,775	*13,775*

Brief Descriptions of issue:
To increase appropriations for salary related items due to changes in position and changes in insurance choices throughout the year.

Signature: Debbie Hammond

Title : Executive Assistant

Date: 6-6-2022

For Finance Department Only:
Reviewed by: _____

Budget Amendment: _____

Date: _____

TENNESSEE
Hamblen County
SERVICE • COMMUNITY • INDUSTRY
OFFICE OF THE MAYOR

Hamblen County Commission

For the June 2022 Commission Meeting

Fund	#101

DEPT: **EMA**

Account Number	Description	Increase	Increase
	INCREASE APPROPRIATIONS:		
54410.338	Maintenance and Repair Services - Vehicles	$ 861.88	
	INCREASE REVENUES		
49700.000	Insurance Recovery		$ 861.88
		862	*862*

Brief Descriptions of issue:
To increase appropriations and revenue relating to insurance proceeds received for damages sustained to EMA's F-250

Signature: Chad Bell

Title : EMA Director

Date: 5-23-22

For Finance Department Only:
Reviewed by: _____

Budget Amendment: _____

Date: _____

TENNESSEE
Hamblen County
SERVICE • COMMUNITY • INDUSTRY
OFFICE OF THE MAYOR

Hamblen County Commission

For the June 2022 Commission Meeting

Fund	#101

DEPT: **Parks and Fair Boards**

Account Number	Description	Increase	Increase
	INCREASE APPROPRIATIONS:		
56700.187	Overtime Pay	$ 4,000.00	
56700.204	State Retirement	$ 500.00	
56700.336	Maintenance and Repair Services - Equipment	$ 1,500.00	
56700.499	Other Supplies and Materials	$ 500.00	
	DECREASE APPROPRIATIONS		
56700.454	Water and Sewer		$ 6,500.00
		6,500	*6,500*

Brief Descriptions of issue:
To increase appropriations for salary related items, repair expenses, and other supplies for Cherokee Park to cover expenses through the remainder of FY 21-22.

Signature: [signature]

Title : Park Mgr

Date: 6/7/22

For Finance Department Only:
Reviewed by: _____

Budget Amendment: _____

Date: _____

TENNESSEE
Hamblen County
SERVICE • COMMUNITY • INDUSTRY
OFFICE OF THE MAYOR

Hamblen County Commission

For the June 2022 Commission Meeting

Fund	#101

DEPT: **Maintenance, Juvenile, Sheriff's Dept.**

Account Number	Description	Increase	Decrease
	INCREASE APPROPRIATIONS:		
51810.425	Gasoline - Other Facilities	$ 200.00	
53500.425	Gasoline - Juvenile Court	$ 150.00	
54110.425	Gasoline - Sheriff's Dept	$ 30,000.00	
	DECREASE FUND BALANCE:		
39000.000	Unassigned Fund Balance		$ 30,350.00

Brief Descriptions of issue:
To increase appropriations to cover gasoline expenses in excess of budgeted amount due to price increases.
Additional funds are needed for the Maintenance Dept, Juvenile Court, and the Sheriff's Dept.

Signature: Bill Buttram
Title : County Mayor
Date: 6-8-2022

For Finance Department Only:
Reviewed by: _____
Budget Amendment: _____
Date: _____

TENNESSEE
Hamblen County
SERVICE • COMMUNITY • INDUSTRY
OFFICE OF THE MAYOR

Hamblen County Commission

For the June 2022 Commission Meeting

Fund	#116

DEPT: **Garbage/Sanitation Department**

Account Number	Description	Increase	Decrease
	INCREASE APPROPRIATIONS:		
55710.412	Diesel Fuel	$ 4,200.00	
	DECREASE FUND BALANCE:		
	Garbage Fund		
34630.000	Committed for Public Health And Welfare		$ 4,200.00
		4,200	*4,200*

Brief Descriptions of issue:
To increase appropriations to cover diesel expenses in excess of budgeted amount due to price increases.

Signature: Barry G. Poole
Title : Hamblen County Road Supt.
Date: 06-09-2022

For Finance Department Only:
Reviewed by: _____
Budget Amendment: _____
Date: _____

TENNESSEE
Hamblen County
SERVICE • COMMUNITY • INDUSTRY
OFFICE OF THE MAYOR

Hamblen County Commission

For the June 2022 Commission Meeting

Fund	#131

DEPT: **Highway Department**

Account Number	Description	Increase	Decrease
	INCREASE APPROPRIATIONS:		
63100.412	Diesel Fuel	$ 9,200.00	
	DECREASE FUND BALANCE:		
34550.000	Restricted for Highway/Public Works		$ 9,200.00
		9,200	*9,200*

Brief Descriptions of issue:
To increase appropriations to cover diesel expenses in excess of budgeted amount due to price increases.

Signature: Barry G. Rose

Title : Hamblen County Road Supt.

Date: 06-09-2022

For Finance Department Only:
Reviewed by: _____

Budget Amendment: _____

Date: _____

TENNESSEE
Hamblen County
SERVICE • COMMUNITY • INDUSTRY
OFFICE OF THE MAYOR

Hamblen County Commission

For the June 2022 Commission Meeting

Fund	#101

DEPT: **Geographical Information Systems**

Account Number	Description	Increase	Increase
	INCREASE APPROPRIATIONS:		
51760.106	Deputy(ies)	$ 1,005.00	
51760.204	State Retirement	$ 60.00	
51760.201	Social Security	$ 100.00	
51760.212	Employer Medicare	$ 20.00	
	DECREASE APPROPRIATIONS		
52310.106	Reappraisal Program - Deputy(ies)		$ 1,185.00
		1,185	*1,185*

Brief Descriptions of issue:
To increase appropriations for salary related items due to changes in position and payout of unused leave for GIS technician

Signature: Anne Bryant-Hurst

Title : Finance Director

Date: 6/10/22

For Finance Department Only:
Reviewed by: _____

Budget Amendment: _____

Date: _____

May Permit	2022 Date	Applicant	Type	Address	Construction	Permit	SW	Plumbing	Mech.	Gas	Total	Tax Map	Group	Parcel
22-0210	5/2/22	Keith Ivy	**House 3200 sf**	2079 Panther Creek Rd	**$450,000.00**	$1,400.00	$100.00				**$1,500.00**	039		055.10
22-0211M	5/2/22	Keith Ivy	Mechanical	2079 Panther Creek Rd					$40.00	$20.00	**$60.00**	039		
22-0212	5/2/22	Raymond Rough	Garage	1850 Honeysuckle Lane	$23,000.00	$252.00					**$252.00**	046K	B	014.00
22-0213	5/2/22	Thmas Adkins	Storage Bldg	555 Brentwood Dr.	$8,000.00	$72.00					**$72.00**	0400	A	005.00
22-0214		Skipped									**$0.00**			
22-0215	5/2/22	Terry Lawson	**House 2152 sf**	1182 Collinson Ford Rd	**$275,000.00**	$947.25	$100.00				**$1,047.25**	047		080.04
22-0216M	5/2/22	Terry Lawson	Mechanical	1182 Collinson Ford Rd					$20.00		**$20.00**	047		080.04
22-0217	5/2/22	Betty Miller	Moving House	1290 Alpha Valley Home Rd	$16,000.00	$100.00					**$100.00**	055		018.04
22-0218	5/3/22	Dylan Fye	Storage Bldg	7910 Wall St	$2,000.00	$60.00					**$60.00**	013		019.00
22-0219	5/3/22	Kenny Daniels	DeckCover	4835 Millstone Drive	$12,000.00	$73.00					**$73.00**	036I	A	048.00
22-0220	5/4/22	Jordan Moore	Garage	6152 Powers Rd	$30,000.00	$320.00					**$320.00**	062		035.00
22-0221	5/4/22	Stephen Gilliam	**House 4224 sf**	4772 Southfork Circle	**$350,000.00**	$1,958.10	$100.00				**$2,058.10**	057		095.12
22-0222M	5/4/22	Stephen Gilliam	Mechanical	4772 Southfork Circle					$30.00		**$30.00**	057		095.12
22-0223	5/4/22	Terry Jennings	Garage	1287 Jaybird Rd	$4,919.84	$225.00					**$225.00**	026		003.01
22-0224	5/5/22	Aaron Alder	**House 2498 sf**	1311 Spout Springs Rd	**$400,000.00**	$1,105.50	$100.00				**$1,205.50**	024		113.03
22-0225M	5/5/22	Aaron Alder	Mechanical	1311 Spout Springs Rd					$20.00	$25.00	**$45.00**	024		113.03
22-0226	5/5/22	Stephen Combs	Storage Bldg	5141 Brights Pike	$3,000.00	$60.00					**$60.00**	011		011.00
22-0227	5/5/22	Nannie Sexton	Remodel	624 Old Witt Rd	$82,900.00	$227.50					**$227.50**	050		035.03
22-0228	5/5/22	Philip Hopkins	Deck	4737 Cameron Rd	$5,300.00	$48.00					**$48.00**	040		003.01
22-0229	5/6/22	Michael Henry	Deck/Cover	4808 Fowler Drive	$6,000.00	$169.00					**$169.00**	010L	A	003.00
22-0230	5/6/22	Brooks Malone	In-Ground Pool	4923 Elm Way Circle	$35,000.00	$50.00					**$50.00**	040H	A	012.00
22-0231	5/9/22	Brandon Westmoreland	Storage Bldg	7315 Briarwood Drive	$5,000.00	$0.00					**$0.00**	054B	D	004.00
22-0232	5/9/22	Ruth Serafina	Above-ground Pool	1550 Joe Stephens Rd	$250.00	$50.00					**$50.00**	032		079.16
22-0233	5/10/22	Troy Gibson	Garage	5242 Spencer Hale Rd	$10,400.00	$186.00					**$186.00**	057		140.14
22-0234	5/10/22	Tim Hopkins	**House 1785 sf**	2522 Kidwell Ridge Rd	**$260,000.00**	$981.75	$100.00				**$1,081.75**	023		008.02
22-0235M	5/10/22	Tim Hopkins	Mechanical	2522 Kidwell Ridge Rd					$20.00		**$20.00**	023		008.02
22-0236	5/10/22	James Voiles	Garage	6410 Nicholson Rd	$16,000.00	$180.00					**$180.00**	019		078.09
22-0237	5/10/22	Summit Locations	Sign	7276 St. Clair Rd	$10,000.00	$352.00					**$352.00**	012		026.43
22-0238	5/10/22	Clarissa Haak	Garage	6954 Burke Lane	$9,910.00	$220.50					**$220.50**	054C	A	015.00
22-0239	5/11/22	Phillip McDonald	Deck/Cover	5882 Union Grove Rd	$3,000.00	$92.50					**$92.50**	037		012.05
22-0240	5/11/22	Jessica Perry	Storage Bldg	7519 Primrose Circle	$5,000.00	$72.00					**$72.00**	054A	A	014.00
22-0241	5/11/22	Tim Carlyle	**House 2345 sf**	2716 Reeds Chapel Rd	**$275,000.00**	$1,157.75	$100.00				**$1,257.75**	025		90.03
22-0242M	5/11/22	Tim Carlyle	Mechanical	2716 Reeds Chapel Rd					$20.00	$25.00	**$45.00**	025		90.03
22-0243P	5/11/22	Darrell Moore	Plumbing	2716 Reeds Chapel Rd				$120.00			**$120.00**	025		90.03
22-0244	5/13/22	Karen Kantz	Storage Bldg/deck/cover	1559 Meadow Run Dr	$3,000.00	$41.25					**$41.25**	018J	A	050.00
22-0245	5/13/22	Dish Wireless	Installation of Antennas & radios	450 Threes Springs Rd	$30,000.00	$200.00					**$200.00**	018		134.00
22-0246	5/16/22	Dana Rich	Carport	4195 Cooper Dr	$3,000.00	$25.00					**$25.00**	051		053.00
22-0247	5/16/22	Larry Laforce	Addition	4400 Brockwood Drive	$25,000.00	$95.00					**$95.00**	026O	D	022.00
22-0248	5/18/22	Orsa Holbrooks	Addition	275 Spencer Hale Rd	$3,100.00	$55.00					**$55.00**	050		076.02
22-0249	5/19/22	Melvin Greene	Commercial Storage Bldg #15	7274 St Clair Rd	$135,000.00	$2,640.00					**$2,640.00**	012		026.43
22-0250	5/19/22	Melvin Greene	Commercial Storage Bldg #16	7274 St Clair Rd	$135,000.00	$2,640.00					**$2,640.00**	012		026.43
22-0251	5/19/22	Melvin Greene	Commercial Storage Bldg # 17	7274 St Clair Rd	$135,000.00	$2,640.00					**$2,640.00**	012		026.43
22-0252	5/19/22	Melvin Greene	Commercial Storage Bldg #18	7274 St Clair Rd	$135,000.00	$2,640.00					**$2,640.00**	012		026.46
22-0253		Melvin Greene	Commercial Storage Bldge # 19	7274 St Clair Rd	$135,000.00	$2,640.00					**$2,640.00**	012		026.46
22-0254	5/18/22	Zachary Lassiter	**House 2379 sf**	4556 Westover Pl	**$350,000.00**	$1,031.50	$100.00				**$1,131.50**	035C	C	005.00
22-0255M	5/18/22	Zachary Lassiter	Mechanical	4556 Westover Pl					$40.00		**$40.00**	035C	C	005.00
22-0256	5/19/22	Janet Killion	Deck	3490 Norton Drive	$25,000.00	$72.00					**$72.00**	017K	C	033.00
22-0257	5/19/22	Victor Trobaugh	Addition	1087 Cain Mill Rd	$60,000.00	$145.00					**$145.00**	012		045.00
22-0258	5/20/22	Dale and Shannon Lynch	Pool	4786 Harbor Dr.	$36,000.00	$50.00					**$50.00**	010L	A	059.00
22-0259	5/23/22	Kenneth Scott Lemka	**House 2230 sf**	2992 Clearview	$180,000.00	$1,443.50	$100.00				**$1,543.50**	032		117.03
22-0260M	5/23/22	Kenneth Scott Lemka	Mechanical	2992 Clearview					$20.00		**$20.00**	032		117.03
22-0261	5/20/22	Dean Adams	Carport	1350 Crest Way Dr.	$192.00	$25.00					**$25.00**	040A	B	008.00
22-0262	5/24/22	Michael Skidmore	Deck/Cover	2887 Scenic Lake Circle	$2,000.00	$89.00					**$89.00**	011I	B	021.00
22-0263	5/24/22	Ben and Ashley Quarles	**House 3214 sf**	1170 Collinson Ford Rd	**$561,000.00**	$1,538.25					**$1,538.25**	047		080.04
22-0264M	5/24/22	Ben and Ashley Quarles	Mechanical	1170 Collinson Ford Rd					$20.00		**$20.00**	047		080.04
22-0265	5/25/22	Wayne Parks	Garage	1549 Cain Mill Rd	**$2,400.00**	$96.00					**$96.00**	012		044.26
22-0266	5/25/22	UM + Barbara Rogers	Deck and Pool	6212 Nightingale St	$7,300.00	$92.00					**$92.00**	047C	A	054.00
22-0267	5/26/22	Sherry Cade	Acc. Bldg.	3214 Robinson Creek Rd	$5,800.00	$0.00					**$0.00**	043		075.06
22-0268	5/27/22	Max Fultz	Acc. Bldg.	3435 Heathcliff Rd.	$10,000.00	$78.00					**$78.00**	049		009.41
22-0269	5/27/22	Robert and Carrie Gibson	Pool	551 S. Sugar Hollow Rd.	$6,400.00	$50.00					**$50.00**	041		016.00
22-0269B	5/27/22	Aimee Ray	Garage	1016 Hickory View Dr.	$60,000.00	$337.50					**$337.50**	040I	A	051.00
22-0270	5/27/22	Atmos Energy - Ryan Austin	Pipeline	Alex Hall Lane	$0.00	$0.00					**$0.00**			
22-0271	5/27/22	Clayton Homes Newport	DWMH	1524 River Path	$250,000.00	$350.00					**$350.00**	063G	A	006.00
22-0272	5/27/22	Clayton Homes Rogersville	DWMH	1528 River Path	$250,000.00	$350.00					**$350.00**	063G	A	007.00
22-0273	5/31/22	Peggy May	**House 6267 sf**	5741 Fall Creek Dock Rd	**$777,400.00**	$2,367.75	$100.00				**$2,467.75**	011		082.00
22-0274M	5/31/22	Peggy May	Mechanical	5741 Fall Creek Dock Rd					$30.00		**$30.00**	011		082.00
22-0275P	5/31/22	Peggy May	Plumbing	5741 Fall Creek Dock Rd				$130.00			**$130.00**	011		082.00
22-0276G	5/31/22	Peggy May	Gas	5741 Fall Creek Dock Rd						$30.00	**$30.00**			
	Total			**Total:**	**$5,620,271.84**	**$32,091.60**	**$900.00**	**$250.00**	**$260.00**	**$100.00**	**$33,601.60**			
Running	**Total**				**$37,942,330.82**	**$175,912.40**	**$7,700.00**	**$7,782.00**	**$2,191.00**	**$362.50**	**$193,947.90**			

		Total No.	**Amount**	**Total**
	CHO and Miscellaneous		$35.00	**$35.00**
	Re-Zoning Request		$0.00	**$0.00**
	Variance Request		$0.00	**$0.00**
	Plat Approval		$668.00	**$668.00**
3 lots or	**more**	**Land Disturbance/Development**		$0.00	**$0.00**
	Use on Review		$0.00	**$0.00**
	Refunds		$0.00	**$0.00**
	Total Collected			**$703.00**
	Running Total Collected			**$703.00**

**Stormwater fee not collected in error

** Ag Exempt/ no fee

Grand Total:	**$34,304.60**
2021-2022 Running Total:	$194,650.90

ETHRA HOMES	Monthly	YTD
	0	0

LAW OFFICES
CAPPS & BYRD LLP
1004 WEST FIRST NORTH STREET
MORRISTOWN, TENNESSEE 37814

PAUL R. CAPPS (1922-2003)
FRANK P. CANTWELL JR (Ret.)

CHRISTOPHER P. CAPPS
DAVID S. BYRD

TELEPHONE: (423) 586-3083
FACSIMILE: (423) 586-0513
WEBSITE: cappsbyrdlaw.com
E-MAIL: info@cccblaw.com

June 3, 2022

RECEIVED
JUN 03 2022
OFFICE OF HAMBLEN COUNTY MAYOR

Mr. Bill Brittain, County Mayor
Hamblen County Courthouse
511 West Second North Street
Morristown, TN 37814

RE: INVOICES FOR LEGAL SERVICES RENDERED ON BEHALF OF HAMBLEN COUNTY, TENNESSEE - MAY, 2022

Dear Bill:

Please find enclosed three (3) invoices representing legal services rendered on behalf of Hamblen County, Tennessee during the month of May, 2022.

As usual, one invoice covers our General/Miscellaneous File, and two (2) invoices cover separate county departments.

Please review these invoices, and if you have any questions, please do not hesitate to contact me.

With best regards, I remain,

Very truly yours,

Christopher P. Capps

CPC/alg

Enclosures

https://cccblaw.sharepoint.com/sites/lawfiles/Shared Documents/Hamblen County/Letters/2022/Brittain,Bill(Invoices)-06-03-22.docx

Capps & Byrd, LLP

INVOICE

1004 W. 1st North Street
Morristown, TN 37814

Invoice # 826
Date: 06/03/2022
Due On: 07/03/2022

Hamblen County Government
Hamblen County Courthouse
511 West Second North Street
Morristown, TN 37814

00027-Hamblen County Government

General Account

Type	Date	Description	Quantity	Rate	Total
Service	05/05/2022	E-mail from Trish Bowman re: 5/9 committee meeting; phone conference with Bill Brittain; phone conference with Bill's office; e-mail to Lauren Carroll re: animal control	0.30	$150.00	$45.00
Service	05/09/2022	Committee meeting; review dangerous animal ordinance	0.70	$150.00	$105.00
Service	05/10/2022	E-mails with George Hoch and Mary Ellen Knack re: pending litigation; phone calls with Keith Ely and George Hoch	0.85	$150.00	$127.50
Service	05/12/2022	E-mail from Jesi Harrell re: bond financing; prepare letter, e-mail and mail to Jesi	0.25	$150.00	$37.50
Service	05/13/2022	E-mail bond financing letter to Bill Brittain	0.05	$150.00	$7.50
Expense	05/17/2022	Copies: Copies of the Motion for Default, Order of Reference, Additional Service of Process and Order of Sale	378.00	$0.10	$37.80
Expense	05/17/2022	Postage: Postage for the Motion for Default, Order of Reference, Additional Service of Process and Order of Sale	63.00	$0.58	$36.54
				Total	**$396.84**

Detailed Statement of Account

Other Invoices

Invoice Number	Due On	Amount Due	Payments Received	Balance Due
809	06/05/2022	$762.18	$0.00	$762.18

Current Invoice

Invoice Number	Due On	Amount Due	Payments Received	Balance Due
826	07/03/2022	$396.84	$0.00	$396.84
			Outstanding Balance	**$1,159.02**
			Amount in Trust	**$0.00**
			Total Amount Outstanding	**$1,159.02**

Please make all amounts payable to: Capps & Byrd, LLP

Please pay within 30 days.

Capps & Byrd, LLP

INVOICE

1004 W. 1st North Street
Morristown, TN 37814

Invoice # 824
Date: 06/03/2022
Due On: 07/03/2022

Hamblen County Government
Hamblen County Courthouse
511 West Second North Street
Morristown, TN 37814

00068-Hamblen County Planning Department

Planning

Type	Date	Description	Quantity	Rate	Total
Service	05/02/2022	E-mails from and to Tommy McKinney and Bill Brittain; draft and print Sizemore Petitions; deliver to Bill Brittain office	1.50	$150.00	$225.00
Service	05/03/2022	E-mails from and to Tommy McKinney re: cases; file and obtain service with Joe Perales	0.75	$150.00	$112.50
Service	05/04/2022	E-mails from and to Tommy McKinney re: cases; e-mail from Lowe	0.25	$150.00	$37.50
Service	05/06/2022	E-mails from and to Tommy McKinney re: property	0.05	$150.00	$7.50
Service	05/09/2022	Phone conference with R. Laster re: Sizemore	0.20	$150.00	$30.00
Service	05/13/2022	E-mails from and to Tommy McKinney re: properties; letter to Asmus	0.25	$150.00	$37.50
Service	05/16/2022	E-mails to and from Tommy McKinney re: properties; phone conference with Sizemore; phone conference with Tommy McKinney	0.35	$150.00	$52.50
Service	05/18/2022	E-mails to and from Tommy McKinney re: pending litigation; phone conference with Edgar Gray re: Sizemore	0.20	$150.00	$30.00
Service	05/19/2022	Prepare Order in Johnson	0.15	$150.00	$22.50
Service	05/23/2022	E-mail from Tina Whitaker re: memorandum	0.10	$150.00	$15.00
Service	05/24/2022	Court; phone conference with Tommy McKinney	0.95	$150.00	$142.50
Service	05/25/2022	Prepare Order; e-mails to and from Matthew Evans; call to Sizemore	0.45	$150.00	$67.50
Service	05/26/2022	E-mails from and to Matthew Evans; e-mail from Chancery Court with signed Order; phone conference with Sizemore	0.15	$150.00	$22.50

Total	**$802.50**

Detailed Statement of Account

Other Invoices

Invoice Number	Due On	Amount Due	Payments Received	Balance Due
808	06/05/2022	$337.50	$0.00	$337.50

Current Invoice

Invoice Number	Due On	Amount Due	Payments Received	Balance Due
824	07/03/2022	$802.50	$0.00	$802.50
			Outstanding Balance	**$1,140.00**
			Amount in Trust	**$0.00**
			Total Amount Outstanding	**$1,140.00**

Please make all amounts payable to: Capps & Byrd, LLP

Please pay within 30 days.

Capps & Byrd, LLP

INVOICE

1004 W. 1st North Street
Morristown, TN 37814

Invoice # 825
Date: 06/03/2022
Due On: 07/03/2022

Hamblen County Road Department
511 West Second North Street
Morristown, TN 37814

00055-Hamblen County Road Department

Road Department

Type	Date	Description	Quantity	Rate	Total
Service	05/12/2022	Phone conference with Barry Poole and review e-mail from Sharon Elkins re: bid package	0.80	$150.00	$120.00
Service	05/13/2022	Review e-mail from Sharon Elkins re: award letter	0.10	$150.00	$15.00
				Total	**$135.00**

Detailed Statement of Account

Other Invoices

Invoice Number	Due On	Amount Due	Payments Received	Balance Due
812	06/05/2022	$45.00	$0.00	$45.00

Current Invoice

Invoice Number	Due On	Amount Due	Payments Received	Balance Due
825	07/03/2022	$135.00	$0.00	$135.00
			Outstanding Balance	**$180.00**
			Amount in Trust	**$0.00**
			Total Amount Outstanding	**$180.00**

Please make all amounts payable to: Capps & Byrd, LLP

Please pay within 30 days.

MONTHLY REPORT
Hamblen County Coroner
P.O. Box 1479
Morristown, Tennessee 37816-1479
Phones (423)Home 581-6229 Fax 289-1262 Cell 312-6322

June 1, 2022

RECEIVED
JUN 06 2022
OFFICE OF COUNTY MAYOR

Hamblen County Commission
C/O Mr. Bill Brittian, County Mayor
Hamblen County Court House
Morristown, Tennessee 37814

Dear Commissioners:
The following Coroner calls were investigated by me during the month of May along with being on call 24/7/365, recording/maintaining statistics, prepare reports, training, assisting, directing and reviewing each call, and the work of all Deputy Coroners and, serving as liaison between Medical Examiner and Pathologist; Collecting, preparing and shipping toxicology specimens and reviewing/approving all cremation requests.

#	CASE#	DATE	NAME, AGE, HOME ADDRESS *1
1.	22260	05-01-22	Mrs. Joyce Nicely, 75, 5835 North Second Street
2.	22261	05-01-22	Ms. Patricia Fergerson, 73, 2160 Valley Home Road
3.	22262	05-02-22	Mrs. Gwendolyn Kirk, 75, 4109 Carnation Drive
4.	22263	05-02-22	Mr. Jerry Wilson, 85, 5274 Stuffel Road,
5.	22264	05-05-22	Mrs. Dorothy Carpenter, 92, 486 Panther Creek Road.
6.	22265	05-06-22	Mr. Charles Thompson, 84, Bean Station, TN
7.	22266	05-07-22	Mrs. Carolyn Cornett, 63, 578 Housley Circle
8.	22267	05-08-22	Mrs. Margaret Trent, 95, 1617 Oak Street
9.	22268	05-14-22	Mrs. Faye Huffman,79, 2003 Buffalo Trail
10.	22269	05-16-22	Mrs. Dorothy Long, 60, Rutledge, TN
11.	22270	05-17-22	Mrs. Antoinette Harbin, 92, Watertown, NY
12.	22271	05-19-22	Mr. Steven Rouse, 72, 5180 Old Kentucky Road
13.	22272	05-19-22	Mr. Charles McClanahan, 89, 464 Carroll Road
14.	22273	05-21-22	Mrs. Pamelal Lewis, 56, 1428 Tyler Circle
15.	22274	05-23-22	Mrs. Cheryl McLeish, 60, 3274 Oak Dale Lane
16.	22275	05-23-22	Mrs. Tina Patton, 55, 1320 Slop Creek Road
17.	22276	05-23-22	Mrs. Sandra Cluesman, 80, 2585 Robin Circle
18.	22277	05-26-22	Mrs. Connie McDonald, 85, 1816 Reed Street
19.	22278	05-26-22	Mr. Charles Sephens, 71, 575 Rippetoe Avenue
20.	22279	05-26-22	Mr. Bruce Brooks, 66, 134 King Avenue
21.	22280	05-30-22	Mrs. Frances Roberts, 81, 1996 Pleasant Ridge Road
22.	22281	05-30-22	Mr. William Denny, 91, 1151 East Branch Drive
23.	22282	05-31-22	Mrs. Barbara Burns, 79, 491 Old Popular Ridge Road

I certify that I attended the cases listed above. I request the allocated fees of $40.00 per call.

23 Calls X $40. = $920.00

If I may ever provide any additional information or assistance, please feel free to contact me at any time on my cell phone 423-312-6322.

Eddie R. Davis
Hamblen County Coroner

CC: Hamblen County Medical Examiner
* Indicates Autopsy Performed
** Omitted from previous Month's Report
*1 All home addresses are Hamblen County unless otherwise stated. C, Toxicology Samples Collected by Coroner's Office and sent to: AXIS Forensic Toxicology (Formerly AIT Laboratories), Indianapolis, IN
CALLS ARE NOT ALWAYS IN DATE AND TIME ORDER!

Claude Thompson

Death Investigations

Phone: 423-585-7117

INVOICE

Invoice Date: 6-7-2022

BILL TO:

Hamblen Co. Government

Name	AMOUNT
Mark Thompson	$40.00
Danny Sapp	$40.00
Robin Demonbreun	$40.00
Daniel Morrison	$40.00
Johnnie Moore	$40.00
Robert Wright	$40.00
Jean Jones	$40.00
Jerry Broyhill	$40.00
Janvee Anderson	$40.00

TOTAL $360.00

Make all checks payable to Claude Thompson

Thank you!

MDI 2

Jimmy Peoples

Death Investigations

Phone: 423-273-0165

INVOICE

Invoice Date: 6-7-2022

BILL TO:

Hamblen Co. Government

Name	AMOUNT
Sandra Bednar	$40.00
Manfred Shoemaker	$40.00
Marian Black	$40.00
Jerry Baxter	$40.00
Dolores Pratt	$40.00
James Inman	$40.00
Eddie Russell	$40.00
Kacie Jacobs (Autopsy)	$40.00

TOTAL $320.00

Make all checks payable to Jimmy Peoples

Thank you!

MDI 2

Jeff Holt

Death Investigations

Phone: 423-585-7117

INVOICE

Invoice Date: 6-7-2022

BILL TO:

Hamblen Co. Government

Name	AMOUNT
Charlie Harris	$40.00
Steven Dalton	$40.00
Dencil Smith	$40.00
George Robinson	$40.00
Patricia Lakes	$40.00
Robert Eichinger	$40.00

TOTAL $240.00

Make all checks payable to Jeff Holt

Thank you!

MDI 2

Todd Giles

Death Investigations

Phone: 423-736-7469

INVOICE

Invoice Date: 6-7-2022

BILL TO:

Hamblen Co. Government

Name	AMOUNT
Andrew Dalton (Autopsy)	$40.00
Sandra Haynes	$40.00
George Fillmore	$40.00
Jeffrey Manning	$40.00
Brenda Gibson	$40.00
Joseph Smith	$40.00
Mark Dunaway	$40.00
John Patrick	$40.00
Amanda Goen (Autopsy)	$40.00
TOTAL	$360.00

Make all checks payable to Todd Giles

Thank you!

MOI 2

MAY DEATHS 2022

54 TOTAL

County	DOB	DOD	Age	Full Name	Investigator
Hamblen	07-16-1942	05-31-2022	79	Burns, Barbara	Davis, Eddie
• Hamblen	03-13-1985	05-30-2022	37	Dalton, Andrew	Coppola, Corey
Hamblen	03-10-1931	05-30-2022	91	Denny, William	Davis, Eddie
Hamblen	07-17-1940	05-30-2022	81	Roberts, Frances	Davis, Eddie
Hamblen	03-02-1947	05-30-2022	75	Haynes, Sandra	Giles, Todd
Hamblen	03-28-1950	05-30-2022	72	Fillmore, George	Giles, Todd
Hamblen	02-25-1956	05-26-2022	66	Brooks, Bruce	Davis, Eddie
Hamblen	10-09-1965	05-27-2022	56	Manning, Jeffrey	Giles, Todd
Hamblen	01-26-1929	05-26-2022	93	Harris, Charlie	Holt, Jeffrey E.
Hamblen	08-08-1936	05-26-2022	85	McDonald, Connie	Davis, Eddie
Hamblen	02-15-1963	05-25-2022	59	Gibson, Brenda	Giles, Todd
Hamblen	12-30-1941	05-25-2022	80	Smith, Joseph	Giles, Todd
Hamblen	09-01-1966	05-24-2022	55	Thompson, Mark	Thompson, Claude
Hamblen	10-31-1952	05-23-2022	69	Sapp, Danny	Thompson, Claude
Hamblen	08-18-1968	05-23-2022	53	Dalton, Steven D.	Holt, Jeffrey E.
Hamblen	07-05-1961	05-23-2022	60	Demonbreun, Robin	Thompson, Claude
Hamblen	06-23-1941	05-23-2022	80	Cluesman, Sanora	Davis, Eddie
Hamblen	09-22-1966	05-23-2022	55	Patton, Tina	Davis, Eddie
Hamblen	10-26-1961	05-23-2022	60	McLeish, Cheryl	Davis, Eddie
Hamblen	02-11-1948	05-23-2022	74	Bednar, Sandra	Peoples, Jimmy
Hamblen	01-11-1952	05-21-2022	70	Eichinger, Robert	Holt, Jeffrey E.
Hamblen	10-19-1974	05-22-2022	47	Shoemaker, Manfred	Peoples, Jimmy
Hamblen	04-12-1947	05-21-2022	75	Black, Marian	Peoples, Jimmy
• Hamblen	06-03-1978	05-21-2022	43	Goen, Amanda	Leonard, Laura
Hamblen	05-27-1932	05-19-2022	89	McClanahan, Charles	Davis, Eddie
Hamblen	01-15-1965	05-20-2022	57	Baxter, Jerry	Peoples, Jimmy
Hamblen	09-20-1949	05-19-2022	72	Rouse, Steven	Davis, Eddie
Hamblen	03-14-1974	05-19-2022	48	Morrison, Daniel	Thompson, Claude
Hamblen	03-21-1935	05-17-2022	87	Moore, Johnnie	Thompson, Claude
Hamblen	09-27-1934	05-17-2022	87	Harblin , Antoinette	Davis, Eddie
Hamblen	09-09-1961	05-16-2022	60	Long, Dorothy	Davis, Eddie
Hamblen	01-05-1968	05-15-2022	54	Smith, Dencil	Holt, Jeffrey E.
Hamblen	05-09-1948	05-14-2022	74	Robinson, George M.	Holt, Jeffrey E.
Hamblen	02-12-1943	05-14-2022	79	Huffman, Faye	Davis, Eddie
Hamblen	04-04-1973	05-12-2022	49	Dunaway, Mark	Giles, Todd
Hamblen	01-26-1962	05-12-2022	60	Lakes, Patricia A.	Holt, Jeffrey E.
Hamblen	11-17-1965	05-11-2022	56	Patrick, John	Giles, Todd
Hamblen	06-13-1944	05-11-2022	77	Pratt, Dolores	Peoples, Jimmy
Hamblen	01-07-1962	05-08-2022	60	Wright, Robert	Thompson, Claude
Hamblen	02-02-1927	05-08-2022	95	Trent, Margaret	Davis, Eddie
Hamblen	03-08-1959	05-07-2022	63	Cornett, Carolyn	Davis, Eddie
Hamblen	02-27-1969	05-07-2022	53	Jones, Jeffrey L.	Holt, Jeffrey E.
Hamblen	08-01-1960	05-06-2022	61	Inman, James	Peoples, Jimmy
Hamblen	05-09-1937	05-06-2022	84	Thompson, Charles	Davis, Eddie
Hamblen	04-14-1936	05-05-2022	86	Jones, Jean	Thompson, Claude
• Hamblen	07-27-1976	05-05-2022	45	Jacobs, Kacie	Grunenwald, Brooke
Hamblen	10-14-1929	05-05-2022	92	Carpenter, Dorothy	Davis, Eddie
Hamblen	02-05-1960	05-03-2022	62	Russell, Eddie	Peoples, Jimmy
Hamblen	07-14-1967	05-02-2022	54	Broyhill, Jerry	Thompson, Claude
Hamblen	12-05-1935	05-02-2022	86	Anderson, Janvee	Thompson, Claude
Hamblen	05-28-1946	05-02-2022	75	Kirk, Gwendolyn	Davis, Eddie
Hamblen	01-11-1937	05-02-2022	85	Wilson, Jerry	Davis, Eddie
Hamblen	12-22-1948	05-01-2022	73	Fergerson, Patricia	Davis, Eddie
Hamblen	05-11-1946	05-01-2022	75	Nicely, Joyce	Davis, Eddie

• = Autopsy

BUDGET AMENDMENTS

Hamblen County Commission
Finance Committee
Information Purposes Only

TENNESSEE
Hamblen County
SERVICE • COMMUNITY • INDUSTRY
OFFICE OF THE MAYOR

Budget Amendment approved by County Mayor for review by the County Commission.
(TCA 5-9-407)

Fund **101** ***DEPT:*** **Register of Deeds**

Account Number	Description	Increase	Decrease
	INCREASE APPROPRIATIONS:		
51600.709	Data Processing Supplies	$ 2,317.00	
	DECREASE APPROPRIATIONS:		
51600.435	Office Supplies		$ 617.00
51600.207	Medical Insurance		$ 1,700.00
		2,317	*2,317*

Brief Descriptions of issue:

To increase appropriations to cover Data Processing charges in the Register of Deeds Office through the remainder of FY 21-22

Requesting Department

Signature: Jim Claw

Title : Register of Deeds

Date: 6-7-22

Approval by County Mayor

Signature: Bill Bunch

Title : County Mayor

Date: 6-7-2022

For Finance Department Only:
Reviewed by: _____

Budget Amendment
_____

Hamblen County Commission
Finance Committee
Information Purposes Only

TENNESSEE
Hamblen County
SERVICE • COMMUNITY • INDUSTRY
OFFICE OF THE MAYOR

Budget Amendment approved by County Mayor for review by the County Commission.
(TCA 5-9-407)

Fund **101** *DEPT:* **Property Assessor's Office**

Account Number	Description	Increase	Decrease
	INCREASE APPROPRIATIONS:		
52300.348	Postal Charges	$ 350.00	
	DECREASE APPROPRIATIONS:		
52300.411	Data Processing Supplies		$ 350.00

Brief Descriptions of issue:

To increase appropriations to cover postage expenses in the Property Assessor's Office through the remainder of FY 21-22

Requesting Department

Signature: Keith Ely

Title : Assessor of Property

Date: 5-6-22

Approval by County Mayor

Signature: Bill Brittain

Title : County Mayor

Date: 6-7-2022

For Finance Department Only:
Reviewed by: _____

Budget Amendment
_____

Hamblen County Commission
Finance Committee
Information Purposes Only

TENNESSEE
Hamblen County
SERVICE · COMMUNITY · INDUSTRY
OFFICE OF THE MAYOR

Budget Amendment approved by County Mayor for review by the County Commission.
(TCA 5-9-407)

Fund **101** *DEPT:* **Parks and Fair Boards**

Account Number	Description	Increase	Decrease
	INCREASE APPROPRIATIONS:		
56700.336	Maintenance and Repair Services - Equipment	$ 1,460.00	
	DECREASE APPROPRIATIONS:		
56700.506	Liability Insurance		$ 887.00
56700.513	Worker's Compensation Insurance		$ 573.00

Brief Descriptions of issue:

To increase appropriations to cover equipment repair expenses at Cherokee Park through the remainder of FY 21-22

Requesting Department

Signature: [signature]

Title : Park Mgr

Date: 5/20/22

Approval by County Mayor

Signature: Bill Brittain

Title : County Mayor

Date: 5-20-2022

For Finance Department Only:
Reviewed by: _____

Budget Amendment
_____

Hamblen County Commission
Finance Committee
Information Purposes Only

TENNESSEE
Hamblen County
SERVICE · COMMUNITY · INDUSTRY
OFFICE OF THE MAYOR

Budget Amendment approved by County Mayor for review by the County Commission. (TCA 5-9-407)

Fund **101** *DEPT:* **Jail**

Account Number	Description	Increase	Decrease
	INCREASE APPROPRIATIONS:		
54210.410	Custodial Supplies	$ 3,000.00	
	DECREASE APPROPRIATIONS:		
54210.451	Uniforms		$ 3,000.00

Brief Descriptions of issue:

To increase appropriations to provide for Custodial Supplies through the end of FY22.

Requesting Department

Signature: Debbie Hammond

Title : Executive Assistant

Date: 6-6-2022

Approval by County Mayor

Signature: Bill Brittain

Title : County Mayor

Date: 6-7-2022

For Finance Department Only:
Reviewed by: _____

Budget Amendment
_____

Hamblen County Commission
Finance Committee
Information Purposes Only

TENNESSEE
Hamblen County
SERVICE · COMMUNITY · INDUSTRY
OFFICE OF THE MAYOR

Budget Amendment approved by County Mayor for review by the County Commission.
(TCA 5-9-407)

Fund **101** *DEPT:* **Jail**

Account Number	Description	Increase	Decrease
	INCREASE APPROPRIATIONS:		
54210.335	Maintenance and Repair Services - Buildings	$ 2,000.00	
	DECREASE APPROPRIATIONS:		
54210.790	Other Equipment		$ 2,000.00

Brief Descriptions of issue:

To increase appropriations to cover repair work on the main gate in the Jail slams

Requesting Department

Signature: Capt Jesse Lawis

Title : Jail Admin

Date: 5-10-22

Approval by County Mayor

Signature: Bill Brittain

Title : County Mayor

Date: 5-10-2022

For Finance Department Only:
Reviewed by: _____

Budget Amendment
_____

Hamblen County Commission
Finance Committee
Information Purposes Only

TENNESSEE
Hamblen County
SERVICE • COMMUNITY • INDUSTRY
OFFICE OF THE MAYOR

Budget Amendment approved by County Mayor for review by the County Commission.
(TCA 5-9-407)

Fund **101** ***DEPT:*** **Capital Projects**

Account Number	Description	Increase	Decrease
	INCREASE APPROPRIATIONS:		
91110.712	Heating and Air Conditioning	$ 5,000.00	
	DECREASE APPROPRIATIONS:		
91110.715	Land		$ 5,000.00

Brief Descriptions of issue:

To increase appropriations to replace compressor in Jail HVAC unit in the kitchen.

Requesting Department

Signature: Anne Bryant Hurst for maintenance

Title : Finance Director

Date: 5/19/22

Approval by County Mayor

Signature: Bill Brittain

Title : County Mayor

Date: 5-20-2022

For Finance Department Only:
Reviewed by: _____

Budget Amendment
_____

Hamblen County Commission
Finance Committee
Information Purposes Only

TENNESSEE
Hamblen County
SERVICE · COMMUNITY · INDUSTRY
OFFICE OF THE MAYOR

Budget Amendment approved by County Mayor for review by the County Commission.
(TCA 5-9-407)

Fund **101** ***DEPT:*** **EMA**

Account Number	Description	Increase	Decrease
	INCREASE APPROPRIATIONS:		
54410.338	Maintenance and Repair Services - Vehicles	$ 1,409.38	
	DECREASE APPROPRIATIONS:		
54410.355	Travel		$ 396.50
54410.599	Other Charges		$ 194.24
54410.708	Communication Equipment		$ 818.64
		1,409.38	*1,409.38*

Brief Descriptions of issue:

To increase appropriations to cover additional repairs needed for F-250 and cover the insurance deductible owed after accident involving the vehicle

Requesting Department

Signature: Chris Beal

Title : EMA Director

Date: 6-6-22

Approval by County Mayor

Signature: Bill Brittain

Title : County Mayor

Date: 6-7-2022

For Finance Department Only:
Reviewed by: _____

Budget Amendment
_____

Hamblen County Commission
Finance Committee
Information Purposes Only

TENNESSEE
Hamblen County
SERVICE · COMMUNITY · INDUSTRY
OFFICE OF THE MAYOR

Budget Amendment approved by County Mayor for review by the County Commission.
(TCA 5-9-407)

Fund **101** *DEPT:* **EMA**

Account Number	Description	Increase	Decrease
	INCREASE APPROPRIATIONS:		
54410.338	Maintenance and Repair Services - Vehicles	$ 1,150.00	
	DECREASE APPROPRIATIONS:		
54410.355	Travel		$ 300.00
54410.708	Communication Equipment		$ 850.00

Brief Descriptions of issue:

To increase appropriations to cover additional repairs needed for F-250 and cover the insurance deductible owed after accident involving the vehicle

Requesting Department

Signature: Chris Bell

Title : EMA Director

Date: 5-16-22

Approval by County Mayor

Signature: Bill Brittain

Title : County Mayor

Date: 5-16-2022

For Finance Department Only:
Reviewed by: _____

Budget Amendment
_____

Hamblen County Commission
Finance Committee
Information Purposes Only

TENNESSEE
Hamblen County
SERVICE · COMMUNITY · INDUSTRY
OFFICE OF THE MAYOR

Budget Amendment approved by County Mayor for review by the County Commission. (TCA 5-9-407)

Fund **101** *DEPT:* **Sheriff's Department**

Account Number	Description	Increase	Decrease
	INCREASE APPROPRIATIONS:		
54110.307	Communication	$ 2,200.00	
	DECREASE APPROPRIATIONS:		
54110.450	Tires and Tubes		$ 2,200.00

Brief Descriptions of issue:

To increase appropriations to cover communication expenses for the Sheriff's Dept. in excess of budgeted amount

Requesting Department

Signature: Dewri Hammond

Title : Executive Assistant

Date: 6-10-2022

Approval by County Mayor

Signature: Bill Britton

Title : County Mayor

Date: 6-13-2022

For Finance Department Only:
Reviewed by: _____

Budget Amendment
_____

Hamblen County Commission
Finance Committee
Information Purposes Only

TENNESSEE
Hamblen County
SERVICE · COMMUNITY · INDUSTRY
OFFICE OF THE MAYOR

Budget Amendment approved by County Mayor for review by the County Commission.
(TCA 5-9-407)

Fund **101** *DEPT:* **Jail**

Account Number	Description	Increase	Decrease
	INCREASE APPROPRIATIONS:		
54210.410	Custodial Supplies	$ 3,000.00	
	DECREASE APPROPRIATIONS:		
54210.340	Medical and Dental Services		$ 3,000.00

Brief Descriptions of issue:

To increase appropriations to cover custodial supply expenses for the Jail in excess of budgeted amount

Requesting Department

Signature: Dawn Hammond

Title : Executive Assistant

Date: 6-10-2022

Approval by County Mayor

Signature: Bill Bunch

Title : County Mayor

Date: 6-13-2022

For Finance Department Only:
Reviewed by: _____

Budget Amendment
_____

HAMBLEN COUNTY DEPARTMENT OF EDUCATION
QUARTERLY EXPENDITURE REPORT
Dr. Jeff Perry, Superintendent of Schools

THIRD QUARTER
2021-2022

THE COUNTY BOARD OF EDUCATION REPORTS THE FOLLOWING EXPENDITURES
FOR THE PUBLIC SCHOOL PURPOSE AS OF THE QUARTER ENDING MARCH 31, 2022

GENERAL PURPOSE	BUDGET	SPENT	REMAINING	PERCENT REMAINING
REGULAR INSTRUCTION	$ 47,325,746.29	$ 32,248,125.55	$ 15,077,620.74	31.86%
SPECIAL EDUCATION	7,504,112.16	4,659,315.66	2,844,796.50	37.91%
VOCATIONAL EDUCATION	3,799,137.38	2,493,061.76	1,306,075.62	34.38%
STUDENT BODY	213,000.00	153,224.25	59,775.75	28.06%
ATTENDANCE	4,000.00	671.73	3,328.27	83.21%
HEALTH SERVICES	879,511.00	603,656.55	275,854.45	31.36%
OTHER STUDENT SUPPORT	1,788,518.00	1,267,303.67	521,214.33	29.14%
INSTRUCTIONAL ADMINISTRATION	3,007,203.73	1,875,340.39	1,131,863.34	37.64%
SPECIAL EDUCATION ADMINISTRATION	1,224,792.16	670,852.38	553,939.78	45.23%
VOCATIONAL EDUCATION ADMINISTRATION	258,886.00	188,328.66	70,557.34	27.25%
TECHNOLOGY	1,845,051.00	1,356,560.90	488,490.10	26.48%
BOARD OF EDUCATION	1,434,885.14	1,134,379.44	300,505.70	20.94%
OFFICE OF THE DIRECTOR	713,286.00	487,484.91	225,801.09	31.66%
OFFICE OF THE PRINCIPAL	5,260,546.00	3,535,356.94	1,725,189.06	32.79%
FISCAL SERVICES	702,866.00	384,245.09	318,620.91	45.33%
OPERATION OF PLANT	6,607,584.00	4,304,869.42	2,302,714.58	34.85%
MAINTENANCE OF PLANT	1,625,809.00	1,219,442.35	406,366.65	24.99%
TRANSPORTATION	3,727,026.00	2,499,965.77	1,227,060.23	32.92%
EXTENDED SCHOOL PROGRAM/FAM. RESOURCE	581,219.30	363,094.25	218,125.05	37.53%
EARLY CHILDHOOD EDUCATION	1,382,920.44	867,337.53	515,582.91	37.28%
REGULAR CAPITAL OUTLAY	3,587,000.00	1,408,661.07	2,178,338.93	60.73%
EDUCATION DEBT SERVICE	500,000.00	500,000.00	-	0.00%
TRANSFERS	1,028,244.00	1,000,000.00	28,244.00	2.75%
TOTALS	$ 95,001,343.60	$ 63,221,278.27	$ 31,780,065.33	33.45%

THE COUNTY BOARD OF EDUCATION REPORTS THE FOLLOWING EXPENDITURES

FOR THE PUBLIC SCHOOL PURPOSE AS OF THE QUARTER ENDING MARCH 31, 2022

FEDERAL PROGRAMS - CONSOLIDATED ADMIN.	BUDGET	SPENT	REMAINING	PERCENT REMAINING
REGULAR INSTRUCTION	$ 195,266.97	$ 140,042.86	$ 55,224.11	28.28%
TOTALS	$ 195,266.97	$ 140,042.86	$ 55,224.11	28.28%

FEDERAL PROGRAMS - TITLE I	BUDGET	SPENT	REMAINING	PERCENT REMAINING
REGULAR INSTRUCTION	$ 1,982,678.72	$ 1,199,852.34	$ 782,826.38	39.48%
OTHER STUDENT SUPPORT	122,127.44	53,761.84	68,365.60	55.98%
REGULAR INSTRUCTION	701,011.33	169,762.20	531,249.13	75.78%
TRANSPORTATION	10,000.00	64.17	9,935.83	99.36%
TRANSFERS	62,984.11	-	62,984.11	100.00%
TOTALS	$ 2,878,801.60	$ 1,423,440.55	$ 1,455,361.05	50.55%

FEDERAL PROGRAMS - TITLE IIA	BUDGET	SPENT	REMAINING	PERCENT REMAINING
REGULAR INSTRUCTION	598,189.77	215,293.82	382,895.95	64.01%
TRANSFERS	13,925.51	-	13,925.51	100.00%
TOTALS	$ 612,115.28	$ 215,293.82	$ 396,821.46	64.83%

FEDERAL PROGRAMS - TITLE III	BUDGET	SPENT	REMAINING	PERCENT REMAINING
REGULAR INSTRUCTION	$ 159,532.97	$ 73,891.08	$ 85,641.89	53.68%
OTHER STUDENT SUPPORT	54,063.17	14,035.60	40,027.57	74.04%
TRANSFERS	4,954.22	-	4,954.22	100.00%
TOTALS	$ 218,550.36	$ 87,926.68	$ 130,623.68	59.77%

THE COUNTY BOARD OF EDUCATION REPORTS THE FOLLOWING EXPENDITURES

FOR THE PUBLIC SCHOOL PURPOSE AS OF THE QUARTER ENDING MARCH 31, 2022

FEDERAL PROGRAMS - TITLE IV	BUDGET	SPENT	REMAINING	PERCENT REMAINING
REGULAR INSTRUCTION	$ 62,599.74	$ 57,327.00	5,272.74	8.42%
HEALTH SERVICES	160,001.48	86,490.61	73,510.87	45.94%
REGULAR INSTRUCTION	2,000.00	-	2,000.00	100.00%
TRANSFERS	5,357.12	-	5,357.12	100.00%
TOTALS	$ 229,958.34	$ 143,817.61	$ 86,140.73	37.46%

FEDERAL PROGRAMS - TITLE IX HOMELESS ED.	BUDGET	SPENT	REMAINING	PERCENT REMAINING
REGULAR INSTRUCTION	$ 75,878.92	$ 34,713.89	41,165.03	54.25%
TRANSPORTATION	1,000.00	-	1,000.00	100.00%
TOTALS	$ 76,878.92	$ 34,713.89	$ 42,165.03	54.85%

FEDERAL PROGRAMS - TITLE IX ARP HOMELESS 1.0	BUDGET	SPENT	REMAINING	PERCENT REMAINING
OTHER STUDENT SUPPORT	$ 2,500.00	$ -	$ 2,500.00	100.00%
REGULAR INSTRUCTION	131,290.99	23,768.73	107,522.26	81.90%
TRANSPORTATION	2,500.00	-	2,500.00	100.00%
TOTALS	$ 136,290.99	$ 23,768.73	$ 112,522.26	82.56%

FEDERAL PROGRAMS - TITLE IX ARP HOMELESS 2.0	BUDGET	SPENT	REMAINING	PERCENT REMAINING
REGULAR INSTRUCTION	$ 197,768.53	$ 8,064.53	$ 189,704.00	95.92%
TOTALS	$ 197,768.53	$ 8,064.53	$ 189,704.00	95.92%

THE COUNTY BOARD OF EDUCATION REPORTS THE FOLLOWING EXPENDITURES

FOR THE PUBLIC SCHOOL PURPOSE AS OF THE QUARTER ENDING MARCH 31, 2022

FEDERAL PROGRAMS - CARL PERKINS	BUDGET	SPENT	REMAINING	PERCENT REMAINING
VOCATIONAL EDUCATION	$ 145,630.66	$ 43,196.04	$ 102,434.62	70.34%
OTHER STUDENT SUPPORT	27,000.00	14,153.95	12,846.05	47.58%
VOCATIONAL EDUCATION	10,000.00	2,022.82	7,977.18	79.77%
TRANSFERS	1,601.52	-	1,601.52	100.00%
TOTALS	$ 184,232.18	$ 59,372.81	$ 124,859.37	67.77%

FEDERAL PROGRAMS - IDEA	BUDGET	SPENT	REMAINING	PERCENT REMAINING
SPECIAL EDUCATION	$ 2,605,990.17	$ 1,580,848.83	$ 1,025,141.34	39.34%
SPECIAL EDUCATION	180,645.00	57,428.17	123,216.83	68.21%
TOTALS	$ 2,786,635.17	$ 1,638,277.00	$ 1,148,358.17	41.21%

FEDERAL PROGRAMS - IDEA COMPENSATORY SVCS.	BUDGET	SPENT	REMAINING	PERCENT REMAINING
SPECIAL EDUCATION	$ 35,050.92	$ -	$ 35,050.92	100.00%
SPECIAL EDUCATION	18,596.77	-	18,596.77	100.00%
TOTALS	$ 53,647.69	$ -	$ 53,647.69	100.00%

FEDERAL PROGRAMS - IDEA ARP GRANT	BUDGET	SPENT	REMAINING	PERCENT REMAINING
SPECIAL EDUCATION	$ 308,113.34	$ 39,842.20	$ 268,271.14	87.07%
SPECIAL EDUCATION	$ 85,580.00	$ -	85,580.00	100.00%
TRANSPORTATION	190,586.23	110,411.21	80,175.02	42.07%
TOTALS	$ 584,279.57	$ 150,253.41	$ 434,026.16	74.28%

THE COUNTY BOARD OF EDUCATION REPORTS THE FOLLOWING EXPENDITURES

FOR THE PUBLIC SCHOOL PURPOSE AS OF THE QUARTER ENDING MARCH 31, 2022

FEDERAL PROGRAMS - SPED PRESCHOOL	BUDGET	SPENT	REMAINING	PERCENT REMAINING
SPECIAL EDUCATION	$ 79,964.54	$ 51,249.69	$ 28,714.85	35.91%
SPECIAL EDUCATION	2,301.89	-	2,301.89	100.00%
TOTALS	$ 82,266.43	$ 51,249.69	$ 31,016.74	37.70%

FEDERAL PROGRAMS - SPED ARP PRESCHOOL	BUDGET	SPENT	REMAINING	PERCENT REMAINING
SPECIAL EDUCATION	$ 35,714.23	$ 19,879.60	$ 15,834.63	44.34%
SPECIAL EDUCATION	3,240.00	-	3,240.00	100.00%
TOTALS	$ 38,954.23	$ 19,879.60	$ 19,074.63	48.97%

FEDERAL PROGRAMS - ESSER (CARES) 1.0	BUDGET	SPENT	REMAINING	PERCENT REMAINING
REGULAR INSTRUCTION	$ 328,597.33	$ 133,500.16	$ 195,097.17	59.37%
TECHNOLOGY	106,509.40	64,367.64	42,141.76	39.57%
TOTALS	$ 435,106.73	$ 197,867.80	$ 237,238.93	54.52%

FEDERAL PROGRAMS - ESSER (CARES) 2.0	BUDGET	SPENT	REMAINING	PERCENT REMAINING
REGULAR INSTRUCTION	$ 3,948,318.45	$ 2,273,584.78	$ 1,674,733.67	42.42%
SPECIAL EDUCATION	63,075.00	15,060.65	48,014.35	76.12%
VOCATIONAL EDUCATION	204,459.00	64,882.40	139,576.60	68.27%
HEALTH SERVICES	362,019.00	102,609.63	259,409.37	71.66%
REGULAR INSTRUCTION	595,863.28	475,171.63	120,691.65	20.25%
SPECIAL EDUCATION	2,400.00	-	2,400.00	100.00%
TECHNOLOGY	114,226.00	96,556.00	17,670.00	15.47%
OFFICE OF THE PRINCIPAL	16,000.00	2,111.82	13,888.18	86.80%
OPERATION OF PLANT	608,189.27	520,979.48	87,209.79	14.34%
MAINTENANCE OF PLANT	7,000.00	5,423.55	1,576.45	22.52%
TRANSPORTATION	135,000.00	14,562.40	120,437.60	89.21%
COMMUNITY SERVICES	60,000.00	-	60,000.00	100.00%
REGULAR CAPITAL OUTLAY	2,340,289.84	38,098.51	2,302,191.33	98.37%
TOTALS	$ 8,456,839.84	$ 3,609,040.85	$ 4,847,798.99	57.32%

THE COUNTY BOARD OF EDUCATION REPORTS THE FOLLOWING EXPENDITURES

FOR THE PUBLIC SCHOOL PURPOSE AS OF THE QUARTER ENDING MARCH 31, 2022

FEDERAL PROGRAMS - ESSER (CARES) 3.0	BUDGET	SPENT	REMAINING	PERCENT REMAINING
REGULAR INSTRUCTION	$ 5,278,758.00	$ 1,590,092.90	$ 3,688,665.10	69.88%
SPECIAL EDUCATION	269,724.00	151,445.85	118,278.15	43.85%
VOCATIONAL EDUCATION	708,318.00	416,734.47	291,583.53	41.17%
HEALTH SERVICES	418,653.00	47,489.33	371,163.67	88.66%
OTHER STUDENT SUPPORT	754,690.82	110,413.12	644,277.70	85.37%
REGULAR INSTRUCTION	851,773.00	128,561.11	723,211.89	84.91%
SPECIAL EDUCATION	17,052.00	14,160.90	2,891.10	16.95%
VOCATIONAL EDUCATION	2,933.00	2,932.09	0.91	0.03%
TECHNOLOGY	235,785.00	31,328.81	204,456.19	86.71%
DIRECTOR OF SCHOOLS	4,686.00	4,590.10	95.90	2.05%
OFFICE OF THE PRINCIPAL	105,365.00	57,768.76	47,596.24	45.17%
FISCAL SERVICES	203,101.00	3,119.88	199,981.12	98.46%
OPERATION OF PLANT	216,371.00	35,370.52	181,000.48	83.65%
MAINTENANCE OF PLANT	8,743.00	8,742.05	0.95	0.01%
TRANSPORTATION	75,640.00	29,309.05	46,330.95	61.25%
FOOD SERVICE	44,380.00	42,540.90	1,839.10	4.14%
COMMUNITY SERVICES	7,975.00	7,974.08	0.92	0.01%
EARLY CHILDHOOD EDUCATION	19,079.00	19,077.78	1.22	0.01%
REGULAR CAPITAL OUTLAY	10,950,035.00	1,989,008.00	8,961,027.00	81.84%
TOTALS	$ 20,173,061.82	$ 4,690,659.70	$ 15,482,402.12	76.75%

FEDERAL PGMS. - EPIDEMIOLOGY & LAB GRANT	BUDGET	SPENT	REMAINING	PERCENT REMAINING
HEALTH SERVICES	$ 1,430,898.79	$ 20,871.44	$ 1,410,027.35	98.54%
OTHER STUDENT SUPPORT	20,000.00	-	20,000.00	100.00%
REGULAR CAPITAL OUTLAY	275,000.00	7,887.07	267,112.93	97.13%
TOTALS	$ 1,725,898.79	$ 28,758.51	$ 1,697,140.28	98.33%

THE COUNTY BOARD OF EDUCATION REPORTS THE FOLLOWING EXPENDITURES

FOR THE PUBLIC SCHOOL PURPOSE AS OF THE QUARTER ENDING MARCH 31, 2022

FEDERAL PGMS. - INNOVATIVE HIGH SCHOOLS GRANT	BUDGET	SPENT	REMAINING	PERCENT REMAINING
VOCATIONAL EDUCATION	$ 1,783,797.00	$ 825,771.47	$ 958,025.53	53.71%
VOCATIONAL EDUCATION	216,203.00	17,475.42	198,727.58	91.92%
TRANSPORTATION	-	-	-	0.00%
TOTALS	$ 2,000,000.00	$ 843,246.89	$ 1,156,753.11	57.84%

FEDERAL PGMS. - CTE TEC PATHWAYS GRANT	BUDGET	SPENT	REMAINING	PERCENT REMAINING
VOCATIONAL EDUCATION	$ 19,200.00	$ 17,689.49	$ 1,510.51	7.87%
TRANSPORTATION	55,800.00	49,829.24	5,970.76	10.70%
TOTALS	$ 75,000.00	$ 67,518.73	$ 7,481.27	9.98%

FEDERAL PGMS. - LITERACY STIPEND GRANT	BUDGET	SPENT	REMAINING	PERCENT REMAINING
REGULAR INSTRUCTION PROGRAM	$ 110,000.00	$ 96,114.55	$ 13,885.45	12.62%
TOTALS	$ 110,000.00	$ 96,114.55	$ 13,885.45	12.62%

FEDERAL PGMS. - EARLY LITERACY NETWORK GRANT	BUDGET	SPENT	REMAINING	PERCENT REMAINING
REGULAR INSTRUCTION PROGRAM	$ 80,000.00	$ -	$ 80,000.00	100.00%
TOTALS	$ 80,000.00	$ -	$ 80,000.00	100.00%

TOTAL FEDERAL PROGRAMS	**$ 41,331,553.44**	**$ 13,529,308.21**	**$ 27,802,245.23**	**67.27%**

Hamblen County Government
Jail / Justice Center Project Expenditures
As of May 31, 2022

Category of Costs	Description	Amount		Total Per Category
Moseley Architects	Phase I	$ 117,800.00		
	Phase II	$ 67,500.00		
	Design & Construction Planning Phase	$ 758,400.00		
Paid in FY2021	Design & Construction Planning Phase	$ 699,828.51		
Paid in FY2022	Design & Construction Planning Phase	$ 89,260.00		
	Design & Construction Planning Phase	$ 2,766,808.00		
	Design & Construction Admin Phase	$ 40,279.00		
	Design & Construction Admin Phase	$ 80,558.01		
	Design & Construction Admin Phase	$ 80,558.01	*	
				$ 4,700,991.53
BurWil Construction				
Paid in FY2021	Project Management	$ 283,597.96		
Paid in FY2022	Project Management	$ 32,500.00		
	Project Management	$ 32,500.00		
	Project Management	$ 32,500.00		
	Project Management	$ 52,006.00		
	Project Management	$ 26,003.00		
	Project Management	$ 26,003.00	*	
				$ 485,109.96
Blaine Construction				
Paid in FY2022	Construction	$ 1,185,497.00		
	Construction	$ 2,106,226.00		
	Construction	$ 3,544,750.00		
	Construction	$ 6,551,872.00	*	
				$ 13,388,345.00
Entegrity Consulting				
Paid in FY2021	Commissioning Services	$ 3,294.00		
Paid in FY2022	Commissioning Services	$ 1,098.00		
	Commissioning Services	$ 3,294.00		
				$ 7,686.00
Property Acquisition	Norton Property	$ 55,092.06		
	Johnson Property	$ 151,116.65		
	Graves Property	$ 27,167.96		
	Moody Property	$ 36,709.87		
	Hodge Property	$ 145,575.48		
	Stambaugh Property	$ 220,566.35		
	Gibbons Property	$ 155,601.70		
	425 Allison Street	$ 63,408.00		
	Hale House	$ 385,513.00		
	Wilder Property	$ 5,000.00		
	Whitehead Property	$ 5,000.00		
Paid in FY2021				
	Hale House (remaining City Taxes due)	$ 0.94		
	Whitehead Property	$ 262,188.19		
	Wilder Property	$ 347,794.44		
	Rescue Squad (relocating expenses)	$ 75,000.00		
	Hyde Property - Title Search	$ 250.00		
	Hyde Property	$ 210,425.60		
Paid in FY2022	Property Taxes (540 W. Jackson)	$ 1,326.52	*	$ 2,147,736.76
Other Costs	Site Preparation, Clearing, and Soil Testing and All Other Costs	$ 109,649.17		
Paid in FY2021	Site Preparation, Clearing, and Soil Testing and All Other Costs	$ 169,962.00		
Paid in FY2022	Water Meter-MU	$ 2,500.00		
	Storm Water Annual Fee-TDEC	$ 500.00		
	Construction Services-GEO Services	$ 12,695.00		
	Construction Services-GEO Services	$ 23,535.00		
	Construction Services-GEO Services	$ 29,820.00		
				$ 348,661.17
	Total Expenditures on Jail / Justice Center Project			**$ 21,078,530.42**

*** These expenditures have been paid since the summary was previously presented.**

TENNESSEE
Hamblen County
SERVICE • COMMUNITY • INDUSTRY

PERSONNEL COMMITTEE

Chris Cutshaw
Chairman

Tim Horner
Vice-Chairman

Jeff Akard
Member

Eileen Arnwine
Member

Randy DeBord
Member

Thomas Doty
Member

Tim Goins
Member

Bobby Haun
Member

Joe Huntsman, Sr.
Member

Wayne NeSmith
Member

Mike Reed
Member

Howard Shipley
Member

James Stepp
Member

Taylor Ward
Member

Hamblen County Government
PERSONNEL COMMITTEE

Monday, June 13, 2022
Immediately Following Adjournment of Finance Committee
Large Courtroom – Hamblen County Courthouse

AGENDA

1. **Call to Order** – *Chairman Chris Cutshaw*

2. **Visitors Wishing to Address the Committee about Agenda Items Only** – *Chairman Chris Cutshaw* *(Visitors will allotted 5 minutes to speak)*

3. **Old Business** – *Chairman Chris Cutshaw*
   a. None

4. **New Business** – *Chairman Chris Cutshaw*
   a. Approval of Longevity Pay Submissions

5. **Items of Interest (No Action Necessary)** –*Chairman Chris Cutshaw*
   a. None

6. **Adjournment** – *Chairman Chris Cutshaw*

HAMBLEN COUNTY, TENNESSEE
OFFICE OF COUNTY MAYOR
LONGEVITY PAY APPLICANT PRESENTED TO
THE PERSONNEL COMMITTEE ON
June 13, 2022

LONGEVITY

Last Name	First Name	Hire Date	Amount	Years of Service
Wise	David	6/3/2019	$225.00	3

Hamblen County Government

PUBLIC SERVICES COMMITTEE

Monday, June 13, 2022

Immediately Following the Adjournment of the Personnel Committee

Large Courtroom – Hamblen County Courthouse

TENNESSEE
Hamblen County
SERVICE • COMMUNITY • INDUSTRY

PUBLIC SERVICES COMMITTEE

Tim Goins
Chairman

James Stepp
Vice-Chairman

Howard Shipley
Ex-Officio

Jeff Akard
Member

Eileen Arnwine
Member

Bobby Haun
Member

Tim Horner
Member

Joe Huntsman, Sr.
Member

Wayne NeSmith
Member

AGENDA

1. **Call to Order** – *Chairman Tim Goins*

2. **Visitors Wishing to Address the Committee about Agenda Items Only** – *Chairman Tim Goins* (*Visitors will be allotted 5 minutes to speak)*

3. **Old Business** – *Chairman Tim Goins*
   a. None

4. **New Business** – *Chairman Tim Goins*
   a. Surplus Item-Cherokee Park- *Frank Parker, Cherokee Park Manager*

5. **Items of Interest (No Action Necessary)** – *Chairman Tim Goins*
   a. HUD Point In Time Report from M.A.T.S.

6. **Adjournment** – *Chairman Tim Goins*

Cherokee Park

Hamblen County's Recreational Park and Campground

Date: June 7, 2022

To: Chairman of Public Services Committee, Tim Goins
Public Services Committee Members

From: Frank Parker, Cherokee Park Manager F.P.

Subject: 2002 Bobcat 873

I am requesting the approval to surplus the following bobcat:

2002 Bobcat 873
2,233 Hours

HUD Point in Time Report - Combined

Count:	**2022 PIT Count TN-512 CoC**	Geography:	**Hamblen**
Created by:	**Sims,Savanna**	Created on:	**02/11/2022 11:13 AM**

Summary

Total Persons	107
Adults (age 18 or older)	104
Young Adults (age 18 to 24)	7
Children (under age 18)	3
Unknown Age	0
Unknown Age - Believe to be Adult	0
Unknown Age - Believe to be Young Adult (18-24)	0
Unknown Age - Believe to be Adult (25+)	0
Unknown Age - Believe to be Child	0
Chronically Homeless	12
Veterans	1

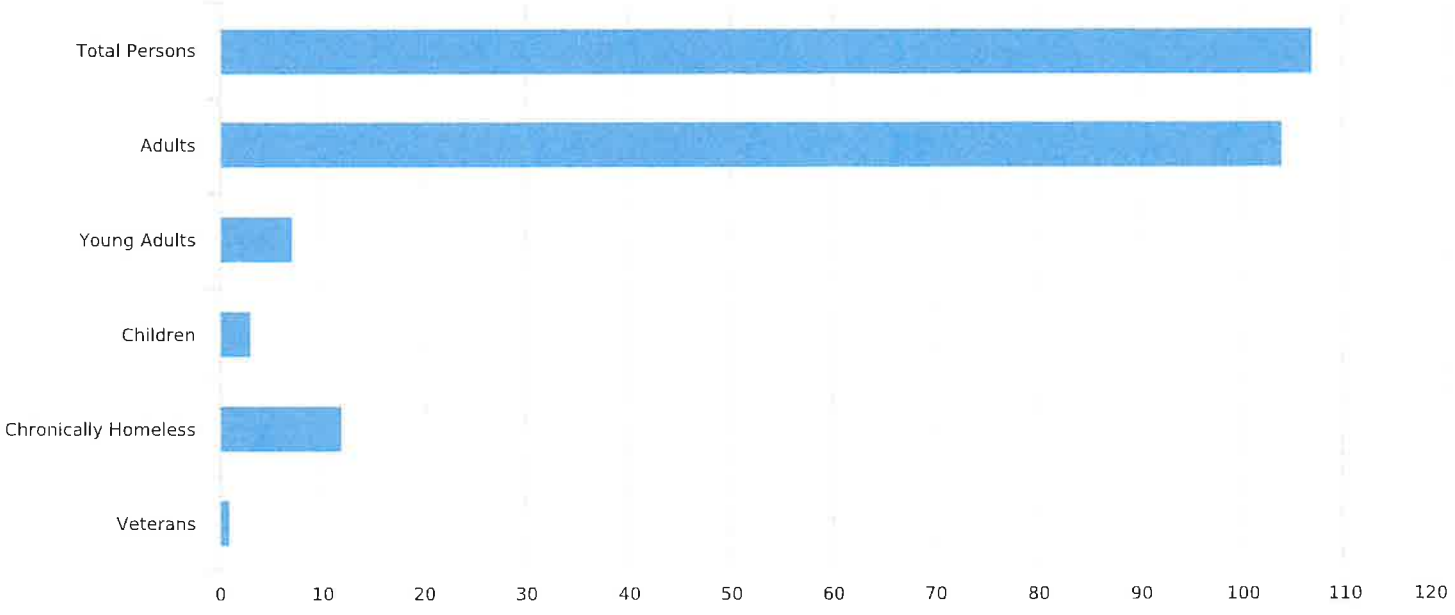

Data Quality Checks

Persons Missing Age Information	0
Persons Missing Sleeping Location	0
Persons Missing Gender	0
Persons Missing Ethnicity	18
Persons Missing Race	0
Persons Missing Relation to HoH	0
Persons with Unknown Household Type	0

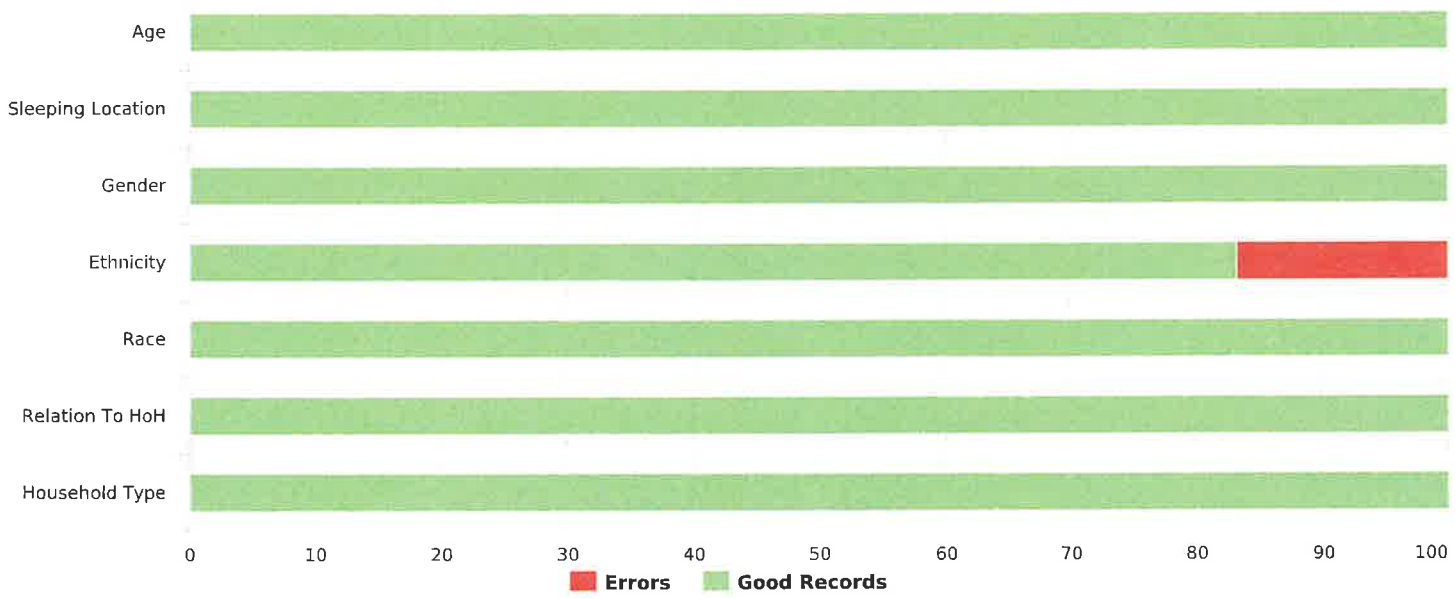

All Households

Households with at Least one Adult and One Child

Household and Person Breakdown

Total Number of Households	2
Total Number of Persons	6
Number of Children (under age 18)	3
Number of Young Adults (age 18 to 24)	0
Number of Adults (age 25 or older)	3

Gender

Female	5
Male	1
Transgender	0
A gender other than singularly female or male (e.g., nonbinary, genderfluid, agender, culturally specific gender)	0
Questioning	0

Ethnicity

Non-Hispanic/Non-Latin(a)(o)(x)	4
Hispanic/Latin(a)(o)(x)	0

Race

White	1
Black, African American or African	0
Asian	0
American Indian, Alaska Native, or Indigenous	0
Native Hawaiian or Pacific Islander	4
Multiple Races	1

Chronically Homeless

Total Number of Households	0
Total Number of Persons	0

Race

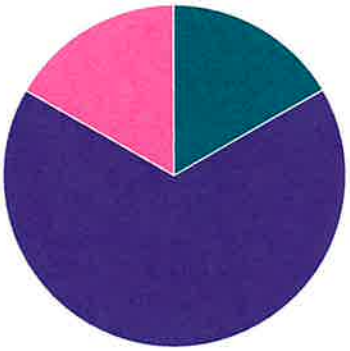

White
Black or African American
Asian
American Indian
Native Hawaiian
Multiple

Gender

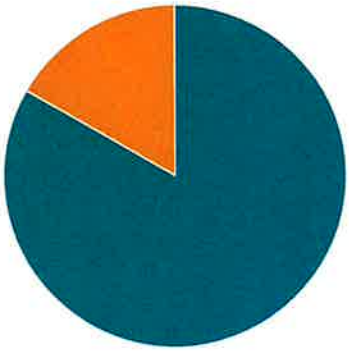

Female
Male
Transgender
A gender other than singularly...
Questioning

Households without Children

Household and Person Breakdown

Total Number of Households	92
Total Number of Persons	101
Number of Young Adults (age 18 to 24)	7
Number of Adults (age 25 or older)	94

Gender

Female	30
Male	71
Transgender	0
A gender other than singularly female or male (e.g., nonbinary, genderfluid, agender, culturally specific gender)	0
Questioning	0

Ethnicity

Non-Hispanic/Non-Latin(a)(o)(x)	83
Hispanic/Latin(a)(o)(x)	2

Race

White	94
Black, African American or African	7
Asian	0
American Indian, Alaska Native, or Indigenous	0
Native Hawaiian or Pacific Islander	0
Multiple Races	0

Chronically Homeless

Total Number of Persons	12

Race

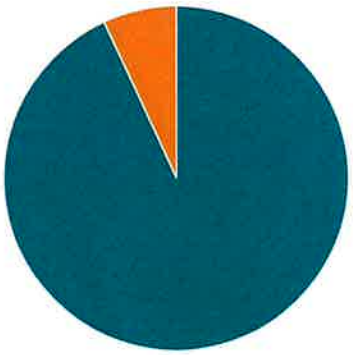

White · Black or African American · Asian · American Indian · Native Hawaiian · Multiple

Gender

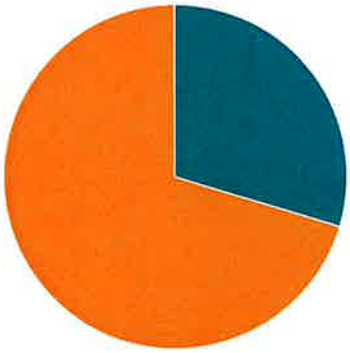

Female · Male · Transgender · A gender other than singularly... · Questioning

Households with Only Children

Household and Person Breakdown

Total Number of Households	0
Total Number of Children	0

Gender

Female	0
Male	0
Transgender	0
A gender other than singularly female or male (e.g., nonbinary, genderfluid, agender, culturally specific gender)	0
Questioning	0

Ethnicity

Non-Hispanic/Non-Latin(a)(o)(x)	0
Hispanic/Latin(a)(o)(x)	0

Race

White	0
Black, African American or African	0
Asian	0
American Indian, Alaska Native, or Indigenous	0
Native Hawaiian or Pacific Islander	0
Multiple Races	0

Chronically Homeless

Total Number of Persons	0

Race

Gender

Veteran Households

Veteran Households with at Least One Adult and One Child

Household and Person Breakdown

Total Number of Households	0
Total Number of Persons	0
Total Number of Veterans	0

Gender

Female	0
Male	0
Transgender	0
A gender other than singularly female or male (e.g., nonbinary, genderfluid, agender, culturally specific gender)	0
Questioning	0

Ethnicity

Non-Hispanic/Non-Latin(a)(o)(x)	0
Hispanic/Latin(a)(o)(x)	0

Race

White	0
Black, African American or African	0
Asian	0
American Indian, Alaska Native, or Indigenous	0
Native Hawaiian or Pacific Islander	0
Multiple Races	0

Chronically Homeless

Total Number of Households	0
Total Number of Persons	0

Race

White Black or African American Asian American Indian Native Hawaiian Multiple

Gender

Female Male Transgender A gender other than singularly... Questioning

Veteran Households without Children

Household and Person Breakdown

Total Number of Households	1
Total Number of Persons	1
Total Number of Veterans	1

Gender

Female	1
Male	0
Transgender	0
A gender other than singularly female or male (e.g., nonbinary, genderfluid, agender, culturally specific gender)	0
Questioning	0

Ethnicity

Non-Hispanic/Non-Latin(a)(o)(x)	1
Hispanic/Latin(a)(o)(x)	0

Race

White	1
Black, African American or African	0
Asian	0
American Indian, Alaska Native, or Indigenous	0
Native Hawaiian or Pacific Islander	0
Multiple Races	0

Chronically Homeless

Total Number of Households	0
Total Number of Persons	0

Race

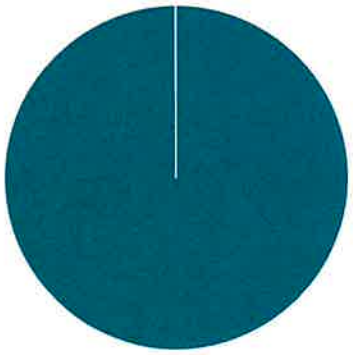

White Black or African American Asian American Indian Native Hawaiian Multiple

Gender

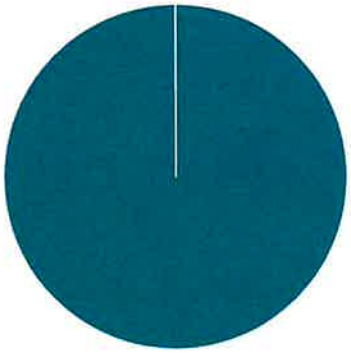

Female Male Transgender A gender other than singularly... Questioning

Youth Households

Unaccompanied Youth Households

Household and Person Breakdown

Total Number of Unaccompanied Youth Households	5
Total Number of Unaccompanied Youth	5
Total Number of Unaccompanied Youth (under age 18)	0
Total Number of Unaccompanied Youth (18 to 24)	5

Gender

Female	2
Male	3
Transgender	0
A gender other than singularly female or male (e.g., nonbinary, genderfluid, agender, culturally specific gender)	0
Questioning	0

Ethnicity

Non-Hispanic/Non-Latin(a)(o)(x)	3
Hispanic/Latin(a)(o)(x)	1

Race

White	4
Black, African American or African	1
Asian	0
American Indian, Alaska Native, or Indigenous	0
Native Hawaiian or Pacific Islander	0
Multiple Races	0

Chronically Homeless

Total Number of Persons	0

Race

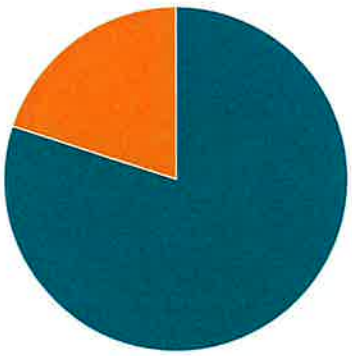

White | Black or African American | Asian | American Indian | Native Hawaiian | Multiple

Gender

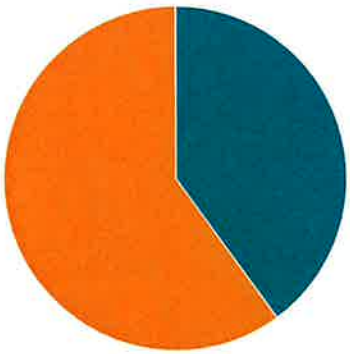

Female | Male | Transgender | A gender other than singularly... | Questioning

Parenting Youth

Household and Person Breakdown

Total Number of Parenting Youth Households	0
Total Number of Persons in Parenting Youth Households	0
Total Parenting Youth	0
Total Children in Parenting Youth Households	0
Number of Parenting Youth Under 18	0
Children in Households with Parenting Youth Under 18	0
Number of Parenting Youth 18 to 24	0
Children in Households with Parenting Youth 18 to 24	0

Gender

Female	0
Male	0
Transgender	0
A gender other than singularly female or male (e.g., nonbinary, genderfluid, agender, culturally specific gender)	0
Questioning	0

Ethnicity

Non-Hispanic/Non-Latin(a)(o)(x)	0
Hispanic/Latin(a)(o)(x)	0

Race

White	0
Black, African American or African	0
Asian	0
American Indian, Alaska Native, or Indigenous	0
Native Hawaiian or Pacific Islander	0
Multiple Races	0

Chronically Homeless

Total Number of Households	0
Total Number of Persons	0

Race

White
Black or African American
Asian
American Indian
Native Hawaiian
Multiple

Gender

Female
Male
Transgender
A gender other than singularly...
Questioning

Additional Homeless Populations (Adults Only)

Serious Mental Illness	6
Substance Use Disorder	7
HIV/AIDS	0
Survivors of Domestic Violence (optional)	0

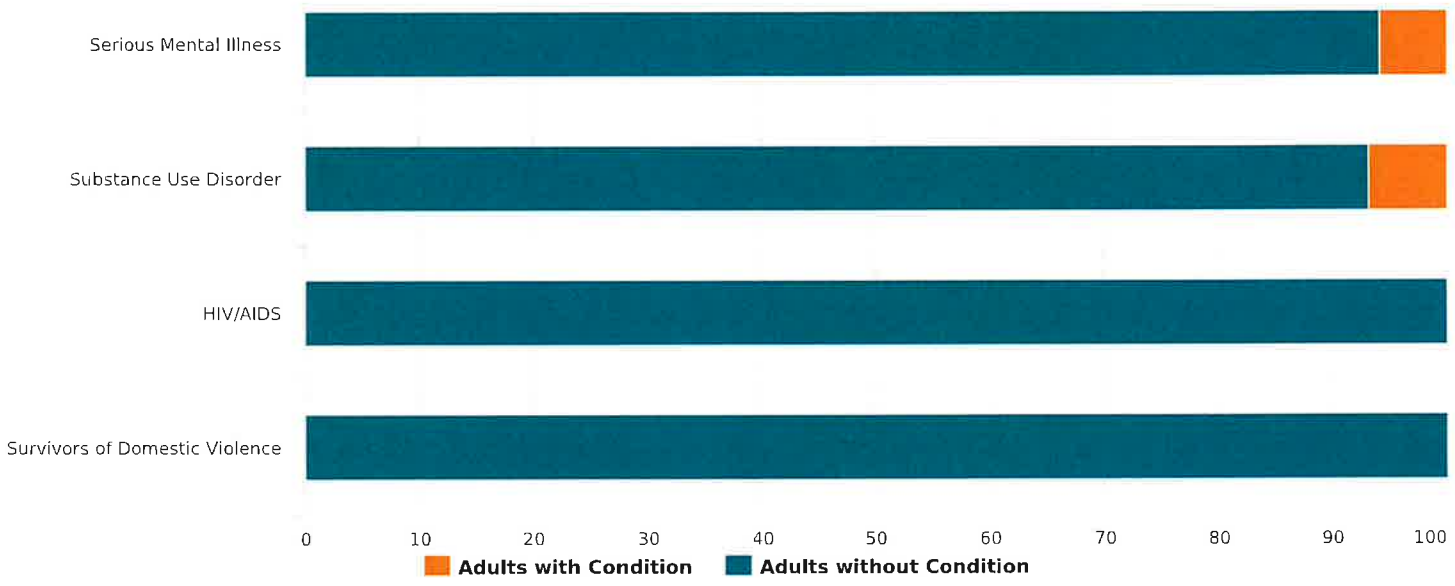

Hamblen County Government

CALENDAR & RULES COMMITTEE

Monday, June 13, 2022

Immediately Following Adjournment of the Public Services Committee

Large Courtroom of the Hamblen County Courthouse

TENNESSEE
Hamblen County
SERVICE • COMMUNITY • INDUSTRY
CALENDAR & RULES COMMITTEE

James Stepp
Chairman

Tim Horner
Vice-Chairman

Howard Shipley
Ex-Officio

Eileen Arnwine
Member

Thomas Doty
Member

Joe Huntsman, Sr.
Member

Wayne NeSmith
Member

AGENDA

1. **Call to Order** – *Chairman James Stepp*

2. **Visitors Wishing to Address the Committee about Agenda Items Only** – *Chairman James Stepp* (Visitors will be allotted 5 minutes to speak)

3. **Old Business -** *Chairman James Stepp*
   a. None

4. **New Business** - *Chairman James Stepp*
   a. Review of Regular Calendar Items
   b. Review of Consent Calendar Items

5. **Items of Interest -** *Chairman James Stepp*
   a. None

6. **Adjournment** – *Chairman James Stepp*

HAMBLEN COUNTY LEGISLATIVE BODY

Regularly Scheduled Monthly Meeting
Thursday, June 23, 2022
5:00 p.m.

Open Meeting - *Sheriff Esco Jarnagin*

Call to Order - *Chairman Howard Shipley*

Prayer – *Commissioner Bobby Haun*

Pledge of Allegiance - *Commissioner Tim Goins*

Roll Call - *County Clerk Penny Petty*

Prepared under the direction of:
Chairman Howard Shipley

DRAFT

REGULAR CALENDAR June 23, 2022 Hamblen County Legislative Body

Order #	Vote	Item
1		**Recognition/Presentations/Proclamations (Commission Chairman Howard Shipley)**
		a. Eddie Davis
		b. Sam Moore
		c. Proclamation-June Dairy Month
2		**Nominations/Appointments (Commission Chairman Howard Shipley)**
		a. Morristown Hamblen Library Board of Trustees Nominations
3		**Calendar and Rules Committee Report (Chairman Jim Stepp)**
	Vote	a. Approval of Consent Calendar Items
	Vote	b. Approval of Regular Calendar Items
4		**Approval of Consent Calendar (Commission Chairman Howard Shipley)**
	Vote	a. Consent Calendar
5		**Public Comment Regarding Business of the Agenda Only (Commission Chairman Howard Shipley)**
6		**Finance Committee (Chairman Randy DeBord)**
	Vote	a. Monthly Checks May 2022
	Vote	b. Request to Purchase Property for Landfill
	Vote	c. Justice Center Project
	Vote	i. CO #3 and #4
	Vote	ii. CO Request from BurWil
	Vote	iii. Laundry Equipment Purchase
	Vote	d. Body Scanner Purchase with Opioid Settlement Funds
	Vote	e. Resolution 22-__ A Resolution Authorizing Hamblen County to Increase the Threshold Required for Sealed Competitive Bids and Proposals
	Vote	f. Bid Tabulation-New Non-Refurbished Personal Computers (2022-19)
		g. Banking Contract HomeTrust
		h. Budget Amendments
	Vote	i. Hamblen County Board of Education Budget Amendment #7-Code Changes
	Vote	ii. Fund #101- Capital Projects $325,000
	Vote	iii. Fund #101- Drug Court $10,000
	Vote	iv. Fund #101- Sheriff's Department $13,775
	Vote	v. Fund #101- EMA $861.88
	Vote	vi. Fund #101- Parks and Fair Boards $6,500
	Vote	vii Fund #101- Maintenance, Juvenile, Sheriff's Department $30,350
	Vote	viii. Fund #116- Garbage/Sanitation Department $4,200
	Vote	ix. Fund #131- Highway Department $9,200
	Vote	x. Fund #101- Geographical Information Systems $1,185
7		**Public Services Committee (Chairman Tim Goins)**
	Vote	a. Surplus Item-Cherokee Park
8		**Public Comments–General /Non –Agenda Items (Commission Chairman Howard Shipley)**
9		**Announcements /Informational Items /Upcoming Meeting Dates (Commission Chairman Howard Shipley)**
		a. July Committee Meeting: Monday, July 11, 2022 @ 5:30 p.m. at the Courthouse Large Courtroom
		b. July Commission Meeting: Thursday, July 21, 2022 @ 5:00 p.m. at the Courthouse Large Courtroom
		c. Special Called Budget Committee Meeting: Monday, June 27, 2022 @ 5:00 p.m. in the Courthouse Large Courtroom
10		**Adjournment (Commission Chairman Howard Shipley)**

DRAFT

COSENT CALENDAR **June 23, 2022** **Hamblen County Legislative Body**

Order #	Item	Placed From
1	Approval of the Previous Month's Minutes –May 19, 2022	Commission Chairman
2	Approval of Notaries	County Clerk Penny Petty
3	Expenditure Reports – May 2022	Finance Committee
4	Planning Commission Building Permit Log –May 2022	Finance Committee
5	County Attorney Invoices –May 2022	Finance Committee
6	Coroner's Monthly Report – May 2022	Finance Committee
7	Budget Amendments i. Fund # 101-Register of Deeds $2,317 ii. Fund # 101-Property Assessors Office $350 iii. Fund #101- Parks and Fair Boards $1,460 iv. Fund #101- Jail $3,000 v. Fund #101-Jail $2,000 vi. Fund #101-Capital Projects $5,000 vii. Fund #101-EMA $1,409.38 viii. Fund #101-EMA $1,150 ix. Fund #101-Sheriff's Department $2,200 x. Fund #101-Jail $3,000	Finance Committee
8	Hamblen County Department of Education Quarterly Expenditure Report – Third Quarter 2021-2022	Finance Committee
9	Jail/Justice Center Project Expenditures as of May 31, 2022	Finance Committee
10	Annual Dept Report for Year Ending June 30, 2022	Finance Committee
11	Approval of Longevity Pay Submissions	Personnel Committee
12	HUD Point In Time Report from M.A.T.S.	Public Services Committee
13	Approval of Minutes-Budget Committee May 24, 2022, May 26, 2022, May 31, 2022, June 2, 2022, June 7, 2022, June 9, 2022, June 13, 2022	Budget Committee

Thursday, June 23, 2022

DRAFT

Morristown-Hamblen Library

417 WEST MAIN STREET, MORRISTOWN, TN 37814 TELEPHONE: 423-586-6410 / FAX: 423-587-6226

June 9, 2022

Bill Brittain, Mayor
Hamblen County Government
511 West Second North Street
Administrative Building, 1st floor
Morristown, TN 37814

Dear Mayor Brittain:

I am submitting the following nominees on behalf of the Hamblen County Library Board of Trustees for your consideration:

> **Phyllis Ehresman**, 2582 Sharon Circle, Talbott, TN 37877 to serve her first time and replace **David Tilson** who has filled his terms ending June 2022. Phyllis is a retired school teacher from the Hamblen County School System.
>
> **Roxanne Bowen** to fill her second full term starting 2022 and ending 2025.
>
> **Rob Reel** to serve his second full term starting 2022 and ending 2025.
>
> **Debra Williams** has submitted a resignation as of the end of this month and this unexpired vacancy will be filled by the nominating committee.

Sincerely,

Shelly Shropshire

Shelly Shropshire,
Director