TENNESSEE
Hamblen County
SERVICE • COMMUNITY • INDUSTRY
OFFICE OF THE MAYOR

DATE: June 7, 2018

TO: Hamblen County Legislative Body

FROM : Cindy Dibb
Office of the Hamblen County Mayor

RE: **June Committee Meeting Information**

Monday, June 11, 2018 at 11:30 a.m. – **Rose Center – Prater Hall**

- **Presentation from Anne Pope, Executive Director of the Tennessee Arts Commission**
- **Finance Committee –** *Immediately following Presentation from Anne Pope, Executive Director of the Tennessee Arts Commission*
- **Public Services Committee -** *Immediately following Finance Committee*
- **Personnel Committee** - *Immediately following Public Services Committee*
- **Calendar and Rules Committee -** *Immediately following Personnel Committee*

Bill Brittain, *County Mayor*
511 West Second North Street • Morristown, TN 37814 • *office.* 423.586.1931 • *fax.* 423.586.4699
www.HamblenCountyTN.gov • *email.* bbrittain@co.hamblen.tn.us

Return to Committee Cover Page

TENNESSEE
Hamblen County
SERVICE • COMMUNITY • INDUSTRY
FINANCE COMMITTEE

Randy DeBord
Chairman

Herbert Harville
Vice-Chairman

Louis "Doe" Jarvis
Ex-Officio

Hubert Davis
Member

Thomas Doty
Member

Rick Eldridge
Member

Stancil Ford
Member

Joe Huntsman, Sr.
Member

Howard Shipley
Member

Hamblen County Government
FINANCE COMMITTEE

Monday, June 11, 2018
Rose Center – Prater Hall

AGENDA

1. **Call to Order** – *Chairman Randy DeBord*

2. **Visitors Wishing to Address the Committee** – *Chairman Randy DeBord*
(*Visitors will be allotted 5 minutes to speak)*

3. **Recurring Business** – *Chairman Randy DeBord*
   a. Expenditure Reports – May 2018 (*Information Only-No Action Necessary*)
   b. Review/Acceptance of Monthly Checks May 2018 Submitted by the County Mayor's Office

4. **Old Business** – *Chairman Randy DeBord*
   a. None

5. **New Business** – *Chairman Randy DeBord*
   a. Resolution to Waive the County Motor Vehicle Tax for Volunteer Firefighters and Rescue Squad Personnel (1st reading) – *County Mayor Bill Brittain*
   b. Memorandum of Agreement Between the Tennessee Department of Transportation and Hamblen County (Flashing Beacons at Union Heights Elementary School) – *County Mayor Bill Brittain*
   c. Memorandum of Understanding Between the Hamblen County Board of Education and Hamblen County Government (Flashing Beacons at Union Heights Elementary School) – *County Mayor Bill Brittain*
   d. E-911 Reimbursement to the Hamblen County Health Insurance Plan – *County Mayor Bill Brittain*
   e. Cherokee Park Playground/Bathhouse Project – *County Mayor Bill Brittain*
   f. Hamblen County Board of Education – Lease of Modular Classrooms – *HCBOE Business Supervisor Traci Antrican*
   g. Budget Amendments - *Finance Director Anne Bryant-Hurst*
      i. Fund #101 General Fund Various #1
      ii. Fund #101 General Fund Various #2
      iii. Fund #101 Archives $34
      iv. Fund #101 Civil Defense $350
      v. Fund #101 Other Public Safety $800
      vi. Fund #116 Sanitation $26,700
      vii. Fund #116 Sanitation $23,700
      viii. Fund #116 Sanitation $30,000
      ix. Fund #122 Drug Enforcement $5,510
      x. Fund #131 Highway Department $39,000
      xi. Fund #131 Highway Department $20,912
      xii. Fund #131 Highway Department $6,300
      xiii. Fund #131 Highway Department $3,000
      xiv. Fund #131 Highway Department $710
      xv. Fund #151 General Debt Service $55,540

-Continued on next page-

Return to Committee Cover Page

h. Hamblen County Board of Education Budget Amendments - *HCBOE Business Supervisor Traci Antrican*
   i. Amendment #4 FY 17/18 - $25,600
   ii. Amendment #5 FY 17/18 -$25,060

6. **Items of Interest (No Action Necessary)** – *Chairman Randy DeBord*
   a. Planning Commission Building Permit Report – May 2018
   b. County Attorney Invoices – May 2018
   c. Coroner's Monthly Report – May 2018
   d. Hamblen County Board of Education 3rd Quarter Expenditure Report
   e. Budget Amendments Approved by County Mayor
      i. Fund #101 Civil Defense $300
      ii. Fund #101 Data Processing $9,259
      iii. Fund #101 Election Commission $2,500
      iv. Fund #101 Election Commission $500
      v. Fund #101 Jail $4,150
      vi. Fund #101 Juvenile Court $1,000
      vii. Fund #101 Property Assessor $500
      viii. Fund #101 Property Assessor/Reappraisal Program $2,000
      ix. Fund #101 Sheriff's Department $500
      x. Fund #101 Trustee $2,103.08
      xi. Fund #116 Sanitation $460
      xii. Fund # 131 Highway Department $5,000

7. **Adjournment** – *Chairman Randy DeBord*

HAMBLEN COUNTY ACCOUNTS & BUDGETS
GENERAL FUND (101)
EXPENDITURE REPORT
REPORT DATE: 05/31/2018

Sel:	Year	Fnd	Accnt	Obj	Gp	Sub	Loc	Pgm
From:	2017	101	50000	000	00	000	0000	000
Thru:	2017	101	99999	999	99	999	9999	999

Date: 6/6/2018
Time: 9:07 am

Fnd	Account/Description		Revised Budget	Month-to-Date Expenditures	Year-to-Date Expenditures	Encumbrances	Available Funds	Avl Fnds %of Budg
101	51100	County Commission	192,676.00	18,531.02	157,191.83	24,250.00	11,234.17	5.83%
101	51210	Board Of Equalizaton	4,800.00	0.00	0.00	0.00	4,800.00	100.00%
101	51300	County Mayor/Executive	211,238.00	16,475.65	173,271.61	2,369.60	35,596.79	16.85%
101	51400	County Attorney	31,293.00	829.16	11,322.88	0.00	19,970.12	63.82%
101	51500	Election Commission	272,927.00	51,181.47	226,667.72	304.84	45,954.44	16.84%
101	51600	Register Of Deeds	305,783.00	30,084.29	261,766.20	3,298.85	40,717.95	13.32%
101	51720	Planning	240,038.00	15,514.27	181,434.22	1,473.87	57,129.91	23.80%
101	51750	Codes Compliance	25,000.00	0.00	0.00	120.00	24,880.00	99.52%
101	51760	Geographical Information Systems	107,638.00	0.00	58,687.97	164.94	48,785.09	45.32%
101	51810	Other Facilities	797,347.00	85,794.19	726,251.36	38,839.49	32,256.15	4.05%
101	51910	Preservation Of Records	20,806.00	2,190.18	17,816.27	704.37	2,285.36	10.98%
101	52100	Accounting And Budgeting	351,928.00	26,574.68	303,924.26	7,900.00	40,103.74	11.40%
101	52200	Purchasing	39,983.00	3,181.56	33,991.06	0.00	5,991.94	14.99%
101	52300	Property Assessor's Office	357,046.00	26,579.80	288,622.31	3,652.88	64,770.81	18.14%
101	52310	Reappraisal Program	143,502.00	57,481.32	114,041.65	5,758.57	23,701.78	16.52%
101	52400	County Trustee's Office	363,395.00	24,645.45	298,261.92	1,310.97	63,822.11	17.56%
101	52500	County Clerk's Office	687,144.00	54,523.70	545,414.75	4,770.50	136,958.75	19.93%
101	52600	Data Processing	125,228.00	6,098.86	88,385.64	21,710.69	15,131.67	12.08%
101	52900	Other Finance	313,256.00	25,507.98	277,452.55	310.33	35,493.12	11.33%
101	53100	Circuit Court	892,468.60	71,316.58	732,145.99	10,598.52	149,724.09	16.78%
101	53300	General Sessions Court	430,398.00	34,780.71	370,705.99	1,036.50	58,655.51	13.63%
101	53330	Drug Court	156,450.00	9,130.75	124,916.14	6,268.66	25,265.20	16.15%
101	53400	Chancery Court	384,447.00	27,081.90	323,897.88	3,751.17	56,797.95	14.77%
101	53500	Juvenile Court	297,823.00	30,770.79	268,315.04	412.12	29,095.84	9.77%
101	53920	Courtroom Security	796,974.00	79,356.41	828,068.24	2,848.24	-33,942.48	-4.26%
101	54110	Sheriff's Department	2,986,554.00	245,434.68	2,500,699.42	37,299.01	448,555.57	15.02%
101	54160	Administration Of The Sexual Offender Registry	3,768.00	34.00	1,813.40	0.00	1,954.60	51.87%
101	54210	Jail	4,420,207.00	362,448.47	3,687,444.35	125,088.47	607,674.18	13.75%
101	54220	Workhouse	94,822.00	7,660.08	79,931.08	0.00	14,890.92	15.70%
101	54250	Work Release Program	280,761.00	30,401.10	245,183.83	914.30	34,662.87	12.35%
101	54310	Fire Prevention And Control	200,000.00	0.00	190,000.00	0.00	10,000.00	5.00%
101	54410	Civil Defense	97,449.00	6,807.94	76,785.56	3,212.61	17,450.83	17.91%
101	54490	Other Emergency Management	182,147.00	0.00	182,147.00	0.00	0.00	0.00%
101	54510	Inspection And Regulation	6,377.00	322.95	4,221.45	1,831.00	324.55	5.09%
101	54610	County Coroner/Medical Examiner	131,186.00	5,703.83	94,763.30	5,666.70	30,756.00	23.44%

Return to Committee Cover Page

HAMBLEN COUNTY ACCOUNTS & BUDGETS
GENERAL FUND (101)
EXPENDITURE REPORT
REPORT DATE: 05/31/2018

Sel:	Year	Fnd	Accnt	Obj	Gp	Sub	Loc	Pgm
From:	2017	101	50000	000	00	000	0000	000
Thru:	2017	101	99999	999	99	999	9999	999

Date: 6/6/2018
Time: 9:07 am

Fnd	Account/Description		Revised Budget	Month-to-Date Expenditures	Year-to-Date Expenditures	Encumbrances	Available Funds	Avl Fnds %of Budg
101	54900	Other Public Safety	17,000.00	484.32	15,235.10	631.00	1,133.90	6.67%
101	55110	Local Health Center	915,388.00	56,913.97	527,355.17	15,859.77	372,173.06	40.66%
101	55120	Rabies And Animal Control	133,500.00	11,125.00	122,375.00	0.00	11,125.00	8.33%
101	55140	Nursing Home	2,000.00	0.00	2,000.00	0.00	0.00	0.00%
101	55170	Alcohol And Drug Programs	5,000.00	210.00	1,260.00	0.00	3,740.00	74.80%
101	55180	Crippled Children Services	6,000.00	0.00	6,000.00	0.00	0.00	0.00%
101	55390	Appropriation To State	109,233.00	0.00	109,233.00	0.00	0.00	0.00%
101	55520	Aid To Dependent Children	8,000.00	0.00	8,000.00	0.00	0.00	0.00%
101	55530	Child Support	0.00	0.00	0.00	0.00	0.00	0.00%
101	55590	Other Local Welfare Services	40,000.00	510.00	28,230.00	0.00	11,770.00	29.43%
101	55710	Sanitation Management	0.00	0.00	0.00	0.00	0.00	0.00%
101	55900	Other Public Health And Welfare	0.00	0.00	0.00	0.00	0.00	0.00%
101	56100	Adult Activities	11,600.00	0.00	11,600.00	0.00	0.00	0.00%
101	56300	Senior Citizens Assistance	6,500.00	0.00	6,500.00	0.00	0.00	0.00%
101	56500	Libraries	272,250.00	0.00	272,250.00	0.00	0.00	0.00%
101	56700	Parks And Fair Boards	269,959.00	23,494.36	221,746.68	5,507.42	42,704.90	15.82%
101	56900	Other Social, Cultural And Recreational	315,900.00	336.17	272,016.62	0.00	43,883.38	13.89%
101	57100	Agricultural Extension Service	152,416.00	3,061.15	114,750.07	36,111.04	1,554.89	1.02%
101	57300	Forest Service	1,000.00	0.00	1,000.00	0.00	0.00	0.00%
101	57500	Soil Conservation	47,558.00	3,926.20	42,870.32	0.00	4,687.68	9.86%
101	57800	Storm Water Management	27,500.00	2,733.86	7,119.76	3,010.00	17,370.24	63.16%
101	58110	Tourism	54,700.00	-500.00	33,550.00	11,500.00	9,650.00	17.64%
101	58120	Industrial Development	465,000.00	0.00	538,945.00	0.00	-73,945.00	-15.90%
101	58210	Public Transportation	0.00	0.00	0.00	0.00	0.00	0.00%
101	58300	Veterans' Services	20,314.00	1,519.77	17,081.09	0.00	3,232.91	15.91%
101	58600	Employee Benefits	685,437.00	332.70	557,090.42	189.32	128,157.26	18.70%
101	58900	Miscellaneous	225,404.00	407.53	229,165.57	0.00	-3,761.57	-1.67%
101	73300	Community Services	5,500.00	0.00	5,500.00	0.00	0.00	0.00%
101	91110	General Administration Projects	37,078.00	0.00	33,077.50	0.00	4,000.50	10.79%
101	91120	Administration Of Justice Projects	14,110.00	0.00	11,837.66	675.00	1,597.34	11.32%
101	91130	Public Safety Projects	426,060.00	0.00	259,372.98	0.00	166,687.02	39.12%
101	91140	Public Health And Welfare Projects	0.00	0.00	0.00	0.00	0.00	0.00%
101	91150	Social, Cultural And Recreation Projects	0.00	0.00	0.00	0.00	0.00	0.00%
101	91190	Other General Government Proje	35,000.00	0.00	11,949.87	0.00	23,050.13	65.86%
101	99100	Transfers Out	26,227.00	35,269.92	139,321.86	0.00	-113,094.86	-431.22%

Return to Committee Cover Page

HAMBLEN COUNTY ACCOUNTS & BUDGETS
GENERAL FUND (101)
EXPENDITURE REPORT
REPORT DATE: 05/31/2018

Sel:	Year	Fnd	Accnt	Obj	Gp	Sub	Loc	Pgm
From:	2017	101	50000	000	00	000	0000	000
Thru:	2017	101	99999	999	99	999	9999	999

Date: 6/6/2018
Time: 9:07 am

Fnd	Account/Description	Revised Budget	Month-to-Date Expenditures	Year-to-Date Expenditures	Encumbrances	Available Funds	Avl Fnds %of Budg
		$ 20,288,493.60	$ 1,496,268.72	$ 17,081,976.54	$ 389,350.75	$ 2,817,166.31	13.89%

Return to Committee Cover Page

HAMBLEN COUNTY ACCOUNTS & BUDGETS
SOLID WASTE/SANITATION (116)
EXPENDITURE REPORT
REPORT DATE: 05/31/2018

Sel:	Year	Fnd	Accnt	Obj	Gp	Sub	Loc	Pgm
From:	2017	116	50000	000	00	000	0000	000
Thru:	2017	116	99999	999	99	999	9999	999

Page: 1
Date: 6/6/2018
Time: 9:08 am

Fnd	Account/Description	Revised Budget	Month-to-Date Expenditures	Year-to-Date Expenditures	Encumbrances	Available Funds	Avl Fnds %of Budg
116	55710 Sanitation Management	2,246,938.00	162,346.12	1,772,709.47	44,583.29	429,645.24	19.12%
		$ 2,246,938.00	**$ 162,346.12**	**$ 1,772,709.47**	**$ 44,583.29**	**$ 429,645.24**	**19.12%**

Return to Committee Cover Page

HAMBLEN COUNTY ACCOUNTS & BUDGETS
HIGHWAY FUND (131)
EXPENDITURE REPORT
REPORT DATE: 05/31/2018

Sel:	Year	Fnd	Accnt	Obj	Gp	Sub	Loc	Pgm
From:	2017	131	50000	000	00	000	0000	000
Thru:	2017	131	99999	999	99	999	9999	999

Page: 1
Date: 6/6/2018
Time: 9:09 am

Fnd	Account/Description		Revised Budget	Month-to-Date Expenditures	Year-to-Date Expenditures	Encumbrances	Available Funds	Avl Fnds %of Budg
131	61000	Administration	413,427.00	26,238.44	331,109.80	4,991.39	77,325.81	18.70%
131	62000	Highway And Bridge Maintenance	1,270,338.00	86,358.83	921,257.59	57,195.00	291,885.41	22.98%
131	63100	Operation And Maintenance Of Equipment	333,210.00	18,311.86	245,069.61	44,557.76	43,582.63	13.08%
131	66000	Employee Benefits	45,381.00	0.00	25,631.94	0.00	19,749.06	43.52%
131	68000	Capital Outlay	488,278.00	0.00	422,192.82	10,000.00	56,085.18	11.49%
			$ 2,550,634.00	**$ 130,909.13**	**$ 1,945,261.76**	**$ 116,744.15**	**$ 488,628.09**	**19.16%**

Return to Committee Cover Page

COMMISSION APPROVAL LISTING
MONTHLY CHECKS

Fund: 101 General Fund #(101)

ACCT	OBJ	NAME	DATE	Check Nbr	Description			Amount Paid
51100	399	Other Contracted Services	2018-05-31	1010260884	Usi Consulting Group Inc			6,000.00
51100	435	Office Supplies	2018-05-31	1010260858	Evans Office Supply Co			315.00
51100	599	Other Charges	2018-05-03	1010260579	Verizon Wireless			49.84
51100	599	Other Charges	2018-05-24	1010260826	Suntrust Bankcard, NA			34.00
51100	599	Other Charges	2018-05-31	1010260886	Verizon Wireless			49.84
51100	.....	**County Commission**				**Total:**	**5**	**6,448.68**
51300	307	Communication	2018-05-03	1010260579	Verizon Wireless			74.81
51300	307	Communication	2018-05-10	1010260584	AT&T			90.00
51300	307	Communication	2018-05-10	1010260590	Century Link/Business Services			39.10
51300	307	Communication	2018-05-31	1010260886	Verizon Wireless			74.81
51300	351	Rentals	2018-05-24	1010260803	Canon Solutions America, Inc			227.87
51300	355	Travel	2018-05-03	1010260522	Brittain, William H			51.70
51300	355	Travel	2018-05-17	1010260765	Fuelman			22.29
51300	435	Office Supplies	2018-05-31	1010260858	Evans Office Supply Co			953.39
51300	599	Other Charges	2018-05-10	1010260592	Citizen Tribune			59.16
51300	599	Other Charges	2018-05-10	1010260600	English Mountain Spring Water			20.00
51300	599	Other Charges	2018-05-10	1010260605	Food City			24.27
51300	599	Other Charges	2018-05-17	1010260752	Blossom Shop, The			90.00
51300	599	Other Charges	2018-05-24	1010260802	Blossom Shop, The			50.00
51300	599	Other Charges	2018-05-24	1010260826	Suntrust Bankcard, NA			34.00
51300	.....	**County Mayor/Executive**				**Total:**	**14**	**1,811.40**
51400	331	Legal Services	2018-05-10	1010260589	Capps, Cantwell, Capps & Byrd			487.50
51400	331	Legal Services	2018-05-10	1010260626	Taylor Law Firm			234.00
51400	.....	**County Attorney**				**Total:**	**2**	**721.50**
51500	193	Election Worker	2018-05-10	1010260633	ALLEN, SALLY N			125.00
51500	193	Election Worker	2018-05-10	1010260634	ANDERSON, LOIS L			125.00
51500	193	Election Worker	2018-05-10	1010260635	ANDERSON, MARTHA M			125.00
51500	193	Election Worker	2018-05-10	1010260636	Bentley, Virginia			125.00
51500	193	Election Worker	2018-05-10	1010260637	Bond, Eugenia			125.00
51500	193	Election Worker	2018-05-10	1010260638	BOND, JAMES W			125.00
51500	193	Election Worker	2018-05-10	1010260639	BRIDGEWATER, NANCY S			125.00
51500	193	Election Worker	2018-05-10	1010260640	BROWN, ANN W			125.00
51500	193	Election Worker	2018-05-10	1010260641	Bryant, Charles Eldridge			125.00
51500	193	Election Worker	2018-05-10	1010260642	BURGIN, GORDON			50.00
51500	193	Election Worker	2018-05-10	1010260643	CAMPBELL, JOCELYN P			155.00
51500	193	Election Worker	2018-05-10	1010260644	CANSLER, BARBARA M			125.00
51500	193	Election Worker	2018-05-10	1010260645	CARLYLE, MARCIA A			125.00
51500	193	Election Worker	2018-05-10	1010260646	Carter, Jean A			125.00
51500	193	Election Worker	2018-05-10	1010260647	Cole, Gary			125.00
51500	193	Election Worker	2018-05-10	1010260648	COLE, GINGER F			125.00

Return to Committee Cover Page

COMMISSION APPROVAL LISTING
MONTHLY CHECKS

Fund: 101 General Fund #(101)

ACCT	OBJ	NAME	DATE	Check Nbr	Description	Amount Paid
51500	193	Election Worker	2018-05-10	1010260649	COMBS, PAULA B	125.00
51500	193	Election Worker	2018-05-10	1010260650	CONWAY, PATRICE MC	125.00
51500	193	Election Worker	2018-05-10	1010260651	Cook, Betty	125.00
51500	193	Election Worker	2018-05-10	1010260652	Cook, Charlotte	125.00
51500	193	Election Worker	2018-05-10	1010260653	CRAWFORD, BARBARA R	155.00
51500	193	Election Worker	2018-05-10	1010260654	CROSS, CLIFFORD E	125.00
51500	193	Election Worker	2018-05-10	1010260655	CULLIP, CARLA S	155.00
51500	193	Election Worker	2018-05-10	1010260656	DAMON, JOYCE A	125.00
51500	193	Election Worker	2018-05-10	1010260657	DAMON, RAYMOND G	125.00
51500	193	Election Worker	2018-05-10	1010260658	DAVIS, KATHERINE A	125.00
51500	193	Election Worker	2018-05-10	1010260659	DENISE PRICE, GEORGIA EMORY	125.00
51500	193	Election Worker	2018-05-10	1010260660	Dixon, Jason	50.00
51500	193	Election Worker	2018-05-10	1010260661	Dixon, Margaret	125.00
51500	193	Election Worker	2018-05-10	1010260662	DOVER, SONDA M	125.00
51500	193	Election Worker	2018-05-10	1010260663	DREHER, ERIC F	125.00
51500	193	Election Worker	2018-05-10	1010260664	Edmonds, Mitzi	125.00
51500	193	Election Worker	2018-05-10	1010260665	EPPS, JACKIE P	125.00
51500	193	Election Worker	2018-05-10	1010260666	ETTER, JANICE L	125.00
51500	193	Election Worker	2018-05-10	1010260667	EVANS, C DWAINE	125.00
51500	193	Election Worker	2018-05-10	1010260668	GARRISON, RANDY	50.00
51500	193	Election Worker	2018-05-10	1010260669	GATES, BONNIE F	125.00
51500	193	Election Worker	2018-05-10	1010260670	GILBERT, MARY	50.00
51500	193	Election Worker	2018-05-10	1010260671	GILBERT, SANDY	50.00
51500	193	Election Worker	2018-05-10	1010260672	GIVENS, L SUE	125.00
51500	193	Election Worker	2018-05-10	1010260673	Goan, Nancy	125.00
51500	193	Election Worker	2018-05-10	1010260674	Graves, Doris L	125.00
51500	193	Election Worker	2018-05-10	1010260675	GREENE, PHILIP C	155.00
51500	193	Election Worker	2018-05-10	1010260676	GREENE, SUSAN H	125.00
51500	193	Election Worker	2018-05-10	1010260677	GUTHRIE, EDDIE R	125.00
51500	193	Election Worker	2018-05-10	1010260678	HALE, JAMES W	155.00
51500	193	Election Worker	2018-05-10	1010260679	Harrell, David M	155.00
51500	193	Election Worker	2018-05-10	1010260680	HARRELL, SUE J	125.00
51500	193	Election Worker	2018-05-10	1010260681	HARRIS, CLEO M	125.00
51500	193	Election Worker	2018-05-10	1010260682	HARRIS, VIRGINIA L	125.00
51500	193	Election Worker	2018-05-10	1010260683	HERNON, JENNIFER F	125.00
51500	193	Election Worker	2018-05-10	1010260684	Hodge, Barbara	125.00
51500	193	Election Worker	2018-05-10	1010260685	HOLDER, JESSICA R	125.00
51500	193	Election Worker	2018-05-10	1010260686	HOLDER, RONNIE L	155.00
51500	193	Election Worker	2018-05-10	1010260687	Holt, Aaron	50.00
51500	193	Election Worker	2018-05-10	1010260688	HONEYCUTT, DALLAS E	155.00
51500	193	Election Worker	2018-05-10	1010260689	HORNER, ERNEST F	125.00
51500	193	Election Worker	2018-05-10	1010260690	HOWINGTON, BETTY T	155.00
51500	193	Election Worker	2018-05-10	1010260691	HULL, MARY E	125.00

Return to Committee Cover Page

COMMISSION APPROVAL LISTING
MONTHLY CHECKS

Fund: 101 General Fund #(101)

ACCT	OBJ	NAME	DATE	Check Nbr	Description	Amount Paid
51500	193	Election Worker	2018-05-10	1010260692	Hux, William	125.00
51500	193	Election Worker	2018-05-10	1010260693	Inman, Verna M	125.00
51500	193	Election Worker	2018-05-10	1010260694	JACKSON, KATHY ANN	125.00
51500	193	Election Worker	2018-05-10	1010260695	JOHNSON, MICHELLE	50.00
51500	193	Election Worker	2018-05-10	1010260696	KANIPE, DONNA D	125.00
51500	193	Election Worker	2018-05-10	1010260697	KILBY, NICHOLAS K	125.00
51500	193	Election Worker	2018-05-10	1010260698	KILLIAN, EDNA R	125.00
51500	193	Election Worker	2018-05-10	1010260699	LAMB, WILLIAM	50.00
51500	193	Election Worker	2018-05-10	1010260700	LEWIS, DORIS	50.00
51500	193	Election Worker	2018-05-10	1010260701	LOGAN, DIANA M	125.00
51500	193	Election Worker	2018-05-10	1010260702	LOWE, LINDA L	125.00
51500	193	Election Worker	2018-05-10	1010260703	MAHAN, VICKI M	125.00
51500	193	Election Worker	2018-05-10	1010260704	MARSHALL, DAVID R	125.00
51500	193	Election Worker	2018-05-10	1010260705	MATTHEWS, LISA M	125.00
51500	193	Election Worker	2018-05-10	1010260706	MEHAFFEY, JOE H	125.00
51500	193	Election Worker	2018-05-10	1010260707	NEILL, ELIZABETH A	125.00
51500	193	Election Worker	2018-05-10	1010260708	NEWMAN, LYNN P	125.00
51500	193	Election Worker	2018-05-10	1010260709	PAGE, JIMMY R	125.00
51500	193	Election Worker	2018-05-10	1010260710	PETERSON, CAROL W	125.00
51500	193	Election Worker	2018-05-10	1010260711	PHILLIPS, SHIRLEY A	125.00
51500	193	Election Worker	2018-05-10	1010260712	PIGMON, PATRICIA W	125.00
51500	193	Election Worker	2018-05-10	1010260713	Porter, Linda	155.00
51500	193	Election Worker	2018-05-10	1010260714	PURKEY, BETTY S	125.00
51500	193	Election Worker	2018-05-10	1010260715	REEL, REBECCA H	125.00
51500	193	Election Worker	2018-05-10	1010260716	REMIS, LOIS P	125.00
51500	193	Election Worker	2018-05-10	1010260717	ROBERTSON, BOB	50.00
51500	193	Election Worker	2018-05-10	1010260718	Robeson, Janet S	125.00
51500	193	Election Worker	2018-05-10	1010260719	ROPER, AMY L	155.00
51500	193	Election Worker	2018-05-10	1010260720	RUSSELL, ROGER	50.00
51500	193	Election Worker	2018-05-10	1010260721	SEXTON, DANIEL	50.00
51500	193	Election Worker	2018-05-10	1010260722	SHARP, ALAN D	155.00
51500	193	Election Worker	2018-05-10	1010260723	SHARP, SHERRY S	125.00
51500	193	Election Worker	2018-05-10	1010260724	SHAW, CAROLYN C	125.00
51500	193	Election Worker	2018-05-10	1010260725	SHEPARD, JERRY L	155.00
51500	193	Election Worker	2018-05-10	1010260726	SIZEMORE, DARRELL	50.00
51500	193	Election Worker	2018-05-10	1010260727	Smallman-Lloyd, Deana	125.00
51500	193	Election Worker	2018-05-10	1010260728	SNODGRASS, ANGELA G	125.00
51500	193	Election Worker	2018-05-10	1010260729	SNOWDEN, WILLIAM S	155.00
51500	193	Election Worker	2018-05-10	1010260730	STEADMAN, GEORGE F	155.00
51500	193	Election Worker	2018-05-10	1010260731	STEPHENSON, BENJAMIN ALEXANDER	125.00
51500	193	Election Worker	2018-05-10	1010260732	Stephenson, Joyce	125.00
51500	193	Election Worker	2018-05-10	1010260733	STOCKTON, RICHARD M	125.00
51500	193	Election Worker	2018-05-10	1010260734	Stubblefield, Florence	125.00

Return to Committee Cover Page

COMMISSION APPROVAL LISTING
MONTHLY CHECKS

Fund: 101 General Fund #(101)

ACCT	OBJ	NAME	DATE	Check Nbr	Description	Amount Paid
51500	193	Election Worker	2018-05-10	1010260735	SWANN, ROBERT K	155.00
51500	193	Election Worker	2018-05-10	1010260736	Talley, Betty	50.00
51500	193	Election Worker	2018-05-10	1010260737	TALLEY, VERNELL L	125.00
51500	193	Election Worker	2018-05-10	1010260738	TAYLOR, CHRISTOPHER S	125.00
51500	193	Election Worker	2018-05-10	1010260739	THOMAS, BRENDA B	125.00
51500	193	Election Worker	2018-05-10	1010260740	THOMAS, RITA E	125.00
51500	193	Election Worker	2018-05-10	1010260741	THOMPSON, DONNA NOE	125.00
51500	193	Election Worker	2018-05-10	1010260742	THOMPSON, ROSALIND RM	125.00
51500	193	Election Worker	2018-05-10	1010260743	WEBB, EDITH O	125.00
51500	193	Election Worker	2018-05-10	1010260744	WHEELER, SHEILA M	125.00
51500	193	Election Worker	2018-05-10	1010260745	WHITE, CAROL J	125.00
51500	193	Election Worker	2018-05-10	1010260746	WILCOX, DEBRA J	125.00
51500	193	Election Worker	2018-05-10	1010260747	Wilkerson, Ralph W, JR	155.00
51500	193	Election Worker	2018-05-10	1010260748	WOLFE, CHRIS D	155.00
51500	193	Election Worker	2018-05-24	1010260800	ARMSTRONG, CONNIE	50.00
51500	307	Communication	2018-05-10	1010260584	AT&T	18.84
51500	307	Communication	2018-05-10	1010260590	Century Link/Business Services	4.09
51500	312	Contracts With Private Agencies	2018-05-10	1010260586	Brotherton, Landree	1,590.00
51500	312	Contracts With Private Agencies	2018-05-10	1010260611	Leonard, Stewart C	1,590.00
51500	312	Contracts With Private Agencies	2018-05-10	1010260615	Microvote Corporation	4,700.00
51500	332	Legal Notices, Recording And Court Costs	2018-05-10	1010260592	Citizen Tribune	3,800.34
51500	334	Maintenance Agreements	2018-05-10	1010260599	EasyVote Solutions LLC	2,500.00
51500	334	Maintenance Agreements	2018-05-17	1010260771	KNOWiNK, LLC	2,500.00
51500	351	Rentals	2018-05-10	1010260588	Canon Solutions America, Inc	117.42
51500	355	Travel	2018-05-10		Sheraton Music City Hotel	-2,128.80
51500	355	Travel	2018-05-10	1010260621	Sheraton Music City Hotel	2,128.80
51500	355	Travel	2018-05-24	1010260824	Sheraton Music City Hotel	1,596.60
51500	435	Office Supplies	2018-05-10	1010260600	English Mountain Spring Water	10.00
51500	435	Office Supplies	2018-05-31	1010260858	Evans Office Supply Co	629.83
51500	.....	**Election Commission**			**Total: 131**	**33,097.12**
51600	307	Communication	2018-05-10	1010260590	Century Link/Business Services	1.63
51600	435	Office Supplies	2018-05-10	1010260595	County Record Services	5,580.00
51600	709	Data Processing Equipment	2018-05-10	1010260587	Business Information Systems	1,275.65
51600	709	Data Processing Equipment	2018-05-17	1010260753	Business Information Systems	360.00
51600	709	Data Processing Equipment	2018-05-31	1010260853	Business Information Systems	17.50
51600	709	Data Processing Equipment	2018-05-31	1010260858	Evans Office Supply Co	492.96
51600	.....	**Register Of Deeds**			**Total: 6**	**7,727.74**
51720	307	Communication	2018-05-03	1010260579	Verizon Wireless	109.68
51720	307	Communication	2018-05-10	1010260590	Century Link/Business Services	6.64
51720	307	Communication	2018-05-31	1010260886	Verizon Wireless	109.68
51720	320	Dues And Memberships	2018-05-10	1010260623	Strate Insurance Group	50.00

Return to Committee Cover Page

COMMISSION APPROVAL LISTING
MONTHLY CHECKS

Fund: 101 General Fund #(101)

ACCT	OBJ	NAME	DATE	Check Nbr	Description	Amount Paid
51720	331	Legal Services	2018-05-10	1010260589	Capps, Cantwell, Capps & Byrd	405.00
51720	332	Legal Notices, Recording And Court Costs	2018-05-10	1010260592	Citizen Tribune	41.82
51720	338	Maintenance And Repair Services - Vehicles	2018-05-10	1010260620	Porter's Tire Store	33.49
51720	338	Maintenance And Repair Services - Vehicles	2018-05-10	1010260631	Ultimate Shine 3 Minute Express Car Wash	30.00
51720	351	Rentals	2018-05-10	1010260588	Canon Solutions America, Inc	98.75
51720	425	Gasoline	2018-05-17	1010260765	Fuelman	75.85
51720	435	Office Supplies	2018-05-31	1010260864	Home Depot Credit Services	39.90
51720	524	In Service/Staff Development	2018-05-24	1010260826	Suntrust Bankcard, NA	418.00
51720	**.....**	**Planning**			**Total: 12**	**1,418.81**
51810	307	Communication	2018-05-03	1010260579	Verizon Wireless	234.95
51810	307	Communication	2018-05-10	1010260584	AT&T	811.19
51810	307	Communication	2018-05-10	1010260585	AT&T	653.36
51810	307	Communication	2018-05-31	1010260886	Verizon Wireless	234.95
51810	334	Maintenance Agreements	2018-05-03	1010260572	TN Dept Of Labor & Workforce Development	60.00
51810	335	Maintenance And Repair Service - Buildings	2018-05-03	1010260528	City Electric Supply	111.00
51810	335	Maintenance And Repair Service - Buildings	2018-05-03	1010260534	Fenco Supply Co	700.80
51810	335	Maintenance And Repair Service - Buildings	2018-05-03	1010260544	Lakeway Fire Protection, Inc	1,600.00
51810	335	Maintenance And Repair Service - Buildings	2018-05-03	1010260546	Lowe's	350.64
51810	335	Maintenance And Repair Service - Buildings	2018-05-10	1010260629	Town & Country Lock & Key	325.00
51810	335	Maintenance And Repair Service - Buildings	2018-05-24	1010260825	Southeast Landscape Supply	510.00
51810	336	Maintenance And Repair Services - Equipment	2018-05-10	1010260618	NAPA Auto Parts Of Morristown	18.05
51810	338	Maintenance And Repair Services - Vehicles	2018-05-03	1010260548	Master Tech Auto Repair	285.66
51810	338	Maintenance And Repair Services - Vehicles	2018-05-10	1010260631	Ultimate Shine 3 Minute Express Car Wash	120.00
51810	347	Pest Control	2018-05-10	1010260582	Adrian Hale Pest Control Inc	1,038.73
51810	347	Pest Control	2018-05-24	1010260798	Adrian Hale Pest Control Inc	20.00
51810	399	Other Contracted Services	2018-05-10	1010260600	English Mountain Spring Water	23.00
51810	410	Custodial Supplies	2018-05-03	1010260542	Kelsan Inc	1,393.02
51810	410	Custodial Supplies	2018-05-10	1010260591	Cintas Corp., Loc. 207	175.32
51810	410	Custodial Supplies	2018-05-31	1010260866	Kelsan Inc	4,142.63
51810	415	Electricity	2018-05-03	1010260552	Morristown Utilities	19,910.00
51810	415	Electricity	2018-05-31	1010260869	Morristown Utilities	24,573.00
51810	425	Gasoline	2018-05-17	1010260765	Fuelman	428.85
51810	425	Gasoline	2018-05-18	1010260796	By-Lo Market #3	43.00
51810	434	Natural Gas	2018-05-17	1010260751	Atmos Energy	1,803.69
51810	451	Uniforms	2018-05-10	1010260591	Cintas Corp., Loc. 207	355.56
51810	717	Maintenance Equipment	2018-05-03	1010260534	Fenco Supply Co	251.74
51810	717	Maintenance Equipment	2018-05-03	1010260546	Lowe's	1,044.05
51810	717	Maintenance Equipment	2018-05-17	1010260750	Alpha Outdoor Equipment	280.49
51810	**.....**	**Other Facilities**			**Total: 29**	**61,498.68**
51910	351	Rentals	2018-05-10	1010260588	Canon Solutions America, Inc	117.42
51910	435	Office Supplies	2018-05-17	1010260774	Lane, Cindy	99.00

Return to Committee Cover Page

COMMISSION APPROVAL LISTING
MONTHLY CHECKS

Fund: 101 General Fund #(101)

ACCT	OBJ	NAME	DATE	Check Nbr	Description	Amount Paid
51910	435	Office Supplies	2018-05-24	1010260813	Gaylord Bros	809.20
51910	435	Office Supplies	2018-05-31	1010260854	Campbell, Samuel D	10.00
51910	435	Office Supplies	2018-05-31	1010260861	Hamblen County Genealogical Society	24.00
51910	.....	**Preservation Of Records**			**Total: 5**	**1,059.62**
52100	320	Dues And Memberships	2018-05-24	1010260826	Suntrust Bankcard, NA	137.50
52100	349	Printing, Stationery And Forms	2018-05-17	1010260764	First Impression Printing	40.00
52100	355	Travel	2018-05-17	1010260765	Fuelman	6.46
52100	435	Office Supplies	2018-05-24	1010260826	Suntrust Bankcard, NA	14.39
52100	435	Office Supplies	2018-05-31	1010260858	Evans Office Supply Co	30.00
52100	524	In Service/Staff Development	2018-05-24	1010260826	Suntrust Bankcard, NA	554.00
52100	.....	**Accounting And Budgeting**			**Total: 6**	**782.35**
52200	302	Advertising	2018-05-10	1010260592	Citizen Tribune	87.84
52200	.....	**Purchasing**			**Total: 1**	**87.84**
52300	307	Communication	2018-05-10	1010260590	Century Link/Business Services	3.88
52300	320	Dues And Memberships	2018-05-31	1010260879	TN Assn Of Assessing Officers	1,300.00
52300	338	Maintenance And Repair Services - Vehicles	2018-05-10	1010260631	Ultimate Shine 3 Minute Express Car Wash	60.00
52300	355	Travel	2018-05-24	1010260809	Ely, Keith	108.13
52300	425	Gasoline	2018-05-17	1010260765	Fuelman	199.11
52300	435	Office Supplies	2018-05-10	1010260600	English Mountain Spring Water	15.00
52300	.....	**Property Assessor's Office**			**Total: 6**	**1,686.12**
52310	312	Contracts With Private Agencies	2018-05-10	1010260625	Tax Management Associates, Inc	7,115.00
52310	312	Contracts With Private Agencies	2018-05-24	1010260827	Tax Management Associates, Inc	46,080.00
52310	351	Rentals	2018-05-24	1010260803	Canon Solutions America, Inc	108.58
52310	.....	**Reappraisal Program**			**Total: 3**	**53,303.58**
52400	307	Communication	2018-05-10	1010260590	Century Link/Business Services	0.16
52400	332	Legal Notices, Recording And Court Costs	2018-05-10	1010260608	Hamblen County Clerk	70.00
52400	351	Rentals	2018-05-10	1010260588	Canon Solutions America, Inc	117.42
52400	524	In Service/Staff Development	2018-05-17	1010260790	TN County Trustees' Association	300.00
52400	.....	**County Trustee's Office**			**Total: 4**	**487.58**
52500	307	Communication	2018-05-03	1010260579	Verizon Wireless	95.43
52500	307	Communication	2018-05-10	1010260584	AT&T	37.68
52500	307	Communication	2018-05-10	1010260590	Century Link/Business Services	10.52
52500	307	Communication	2018-05-31	1010260886	Verizon Wireless	95.43
52500	351	Rentals	2018-05-10	1010260588	Canon Solutions America, Inc	147.75
52500	355	Travel	2018-05-03	1010260530	Conway, Sharon L	109.98
52500	355	Travel	2018-05-03	1010260533	Elkins, Rose	526.88
52500	355	Travel	2018-05-03	1010260557	Newman, Eugenia L	17.39

Return to Committee Cover Page

COMMISSION APPROVAL LISTING
MONTHLY CHECKS

Fund: 101 General Fund #(101)

ACCT	OBJ	NAME	DATE	Check Nbr	Description			Amount Paid
52500	435	Office Supplies	2018-05-03	1010260523	Business Information Systems			264.00
52500	435	Office Supplies	2018-05-10	1010260600	English Mountain Spring Water			25.00
52500	435	Office Supplies	2018-05-31	1010260858	Evans Office Supply Co			422.22
52500	709	Data Processing Equipment	2018-05-10	1010260587	Business Information Systems			1,314.00
52500	**.....**	**County Clerk's Office**				**Total:**	**12**	**3,066.28**
52600	307	Communication	2018-05-03	1010260579	Verizon Wireless			35.60
52600	307	Communication	2018-05-31	1010260886	Verizon Wireless			137.48
52600	312	Contracts With Private Agencies	2018-05-17	1010260779	MUS Fibernet			279.90
52600	317	Data Processing Services	2018-05-17	1010260779	MUS Fibernet			393.05
52600	317	Data Processing Services	2018-05-31	1010260850	Advanced Communications, Inc			101.98
52600	709	Data Processing Equipment	2018-05-03	1010260524	CDW Government, Inc			16.48
52600	709	Data Processing Equipment	2018-05-17	1010260755	CDW Government, Inc			37.63
52600	**.....**	**Data Processing**				**Total:**	**7**	**1,002.12**
52900	307	Communication	2018-05-10	1010260584	AT&T			375.63
52900	307	Communication	2018-05-10	1010260590	Century Link/Business Services			0.68
52900	317	Data Processing Services	2018-05-03	1010260554	MUS Fibernet			139.19
52900	330	Operating Lease Payments	2018-05-31	1010260875	Sawyer, Mark			1,850.00
52900	335	Maintenance And Repair Service - Buildings	2018-05-10	1010260603	Fish Window Cleaning			23.00
52900	335	Maintenance And Repair Service - Buildings	2018-05-31	1010260859	Fish Window Cleaning			23.00
52900	351	Rentals	2018-05-10	1010260627	Thermocopy Of Tennessee			18.00
52900	351	Rentals	2018-05-10	1010260632	Waste Industries/102 Tidiwaste			45.53
52900	351	Rentals	2018-05-24	1010260828	Thermocopy Of Tennessee			45.50
52900	415	Electricity	2018-05-03	1010260552	Morristown Utilities			642.00
52900	435	Office Supplies	2018-05-10	1010260600	English Mountain Spring Water			21.00
52900	**.....**	**Other Finance**				**Total:**	**11**	**3,183.53**
53100	194	Jury And Witness Expense	2018-05-24	1010260832	Amos, Mary Carolyn			20.00
53100	194	Jury And Witness Expense	2018-05-24	1010260833	Fair, Carrie Lou			20.00
53100	194	Jury And Witness Expense	2018-05-24	1010260834	Hammack, Charles Edward			20.00
53100	194	Jury And Witness Expense	2018-05-24	1010260835	Heck, Richard D.			20.00
53100	194	Jury And Witness Expense	2018-05-24	1010260836	Holt, Jeffrey E.			20.00
53100	194	Jury And Witness Expense	2018-05-24	1010260837	INMAN, OLIVIA K			20.00
53100	194	Jury And Witness Expense	2018-05-24	1010260838	Johnson, George Allen			20.00
53100	194	Jury And Witness Expense	2018-05-24	1010260839	Jones, Stacey Marie			20.00
53100	194	Jury And Witness Expense	2018-05-24	1010260840	Lane, Katie Marie			20.00
53100	194	Jury And Witness Expense	2018-05-24	1010260841	Lane, Kay Hickey			20.00
53100	194	Jury And Witness Expense	2018-05-24	1010260842	MATTHEWS, RUSS			20.00
53100	194	Jury And Witness Expense	2018-05-24	1010260843	MOORE, SAM			25.00
53100	194	Jury And Witness Expense	2018-05-24	1010260844	Royston, Harold Dean			20.00
53100	194	Jury And Witness Expense	2018-05-24	1010260845	Sigler, Bernice W.			20.00
53100	194	Jury And Witness Expense	2018-05-24	1010260846	Vaughn, Virgil John Henry			20.00

Return to Committee Cover Page

COMMISSION APPROVAL LISTING
MONTHLY CHECKS

Fund: 101 General Fund #(101)

ACCT	OBJ	NAME	DATE	Check Nbr	Description			Amount Paid
53100	194	Jury And Witness Expense	2018-05-24	1010260847	Webb, Tonda Rae			20.00
53100	307	Communication	2018-05-03	1010260579	Verizon Wireless			59.84
53100	307	Communication	2018-05-10	1010260584	AT&T			37.68
53100	307	Communication	2018-05-10	1010260590	Century Link/Business Services			15.19
53100	307	Communication	2018-05-31	1010260886	Verizon Wireless			59.84
53100	332	Legal Notices, Recording And Court Costs	2018-05-10	1010260592	Citizen Tribune			62.32
53100	349	Printing, Stationery And Forms	2018-05-03	1010260561	R Chatfield Co, Inc			891.00
53100	349	Printing, Stationery And Forms	2018-05-10	1010260622	Shred-It			13.56
53100	349	Printing, Stationery And Forms	2018-05-31	1010260872	R Chatfield Co, Inc			540.00
53100	351	Rentals	2018-05-10	1010260588	Canon Solutions America, Inc			457.95
53100	399	Other Contracted Services	2018-05-10	1010260596	Davis, Donald R			480.00
53100	435	Office Supplies	2018-05-03	1010260564	Schwaab Inc			44.24
53100	435	Office Supplies	2018-05-24	1010260826	Suntrust Bankcard, NA			544.29
53100	435	Office Supplies	2018-05-31	1010260858	Evans Office Supply Co			2,145.46
53100	709	Data Processing Equipment	2018-05-03	1010260545	Local Government Corporation			3,684.00
53100	.....	**Circuit Court**				**Total:**	**30**	**9,360.37**
53300	307	Communication	2018-05-10	1010260584	AT&T			18.84
53300	307	Communication	2018-05-10	1010260590	Century Link/Business Services			4.41
53300	351	Rentals	2018-05-24	1010260803	Canon Solutions America, Inc			84.70
53300	435	Office Supplies	2018-05-10	1010260600	English Mountain Spring Water			44.00
53300	.....	**General Sessions Court**				**Total:**	**4**	**151.95**
53330	307	Communication	2018-05-03	1010260579	Verizon Wireless			199.36
53330	307	Communication	2018-05-10	1010260584	AT&T			37.68
53330	307	Communication	2018-05-31	1010260886	Verizon Wireless			199.36
53330	351	Rentals	2018-05-10	1010260588	Canon Solutions America, Inc			117.42
53330	355	Travel	2018-05-24	1010260820	McCarter, Lori			70.00
53330	425	Gasoline	2018-05-17	1010260765	Fuelman			83.49
53330	435	Office Supplies	2018-05-10	1010260600	English Mountain Spring Water			13.00
53330	499	Other Supplies And Materials	2018-05-10	1010260605	Food City			228.11
53330	.....	**Drug Court**				**Total:**	**8**	**948.42**
53400	307	Communication	2018-05-10	1010260584	AT&T			18.84
53400	307	Communication	2018-05-10	1010260590	Century Link/Business Services			6.62
53400	351	Rentals	2018-05-10	1010260588	Canon Solutions America, Inc			147.75
53400	355	Travel	2018-05-17	1010260765	Fuelman			44.14
53400	435	Office Supplies	2018-05-10	1010260600	English Mountain Spring Water			18.00
53400	435	Office Supplies	2018-05-24	1010260826	Suntrust Bankcard, NA			42.31
53400	.....	**Chancery Court**				**Total:**	**6**	**277.66**
53500	307	Communication	2018-05-03	1010260579	Verizon Wireless			41.66
53500	307	Communication	2018-05-10	1010260590	Century Link/Business Services			3.75

Return to Committee Cover Page

COMMISSION APPROVAL LISTING
MONTHLY CHECKS

Fund: 101 General Fund #(101)

ACCT	OBJ	NAME	DATE	Check Nbr	Description	Amount Paid
53500	307	Communication	2018-05-31	1010260886	Verizon Wireless	41.66
53500	309	Contracts With Government Agencies	2018-05-31	1010260874	Richard L Bean Juvenile Srv	9,500.00
53500	322	Evaluation And Testing	2018-05-31	1010260855	Community Rehabilitation Agencies of TN	424.00
53500	338	Maintenance And Repair Services - Vehicles	2018-05-17	1010260788	Synergy Auto Wash	8.00
53500	351	Rentals	2018-05-10	1010260588	Canon Solutions America, Inc	117.42
53500	422	Food Supplies	2018-05-10	1010260600	English Mountain Spring Water	20.00
53500	422	Food Supplies	2018-05-31	1010260888	Walmart Community BRC	210.97
53500	425	Gasoline	2018-05-17	1010260765	Fuelman	75.37
53500	524	In Service/Staff Development	2018-05-03	1010260550	Medics LLC	270.00
53500	.....	**Juvenile Court**			**Total: 11**	**10,712.83**
53920	355	Travel	2018-05-24	1010260814	Haag, Steven Earl	229.50
53920	355	Travel	2018-05-24	1010260818	Ingram, Eddie	229.50
53920	524	In Service/Staff Development	2018-05-31	1010260882	TN Law Enforcement Training Academy	6,600.00
53920	716	Law Enforcement Equipment	2018-05-10	1010260630	TruBlu Tactical Police Supply	159.99
53920	.....	**Courtroom Security**			**Total: 4**	**7,218.99**
54110	307	Communication	2018-05-03	1010260579	Verizon Wireless	1,428.00
54110	307	Communication	2018-05-10	1010260584	AT&T	94.20
54110	307	Communication	2018-05-10	1010260590	Century Link/Business Services	65.17
54110	307	Communication	2018-05-17	1010260794	Verizon Wireless	1,825.17
54110	336	Maintenance And Repair Services - Equipment	2018-05-31	1010260888	Walmart Community BRC	41.82
54110	338	Maintenance And Repair Services - Vehicles	2018-05-03	1010260551	Morristown Ford	62.41
54110	338	Maintenance And Repair Services - Vehicles	2018-05-03	1010260581	Xtreme Towing & Automotive Collision Center	1,078.90
54110	338	Maintenance And Repair Services - Vehicles	2018-05-10	1010260597	Drinnon, Kenny	1,009.44
54110	338	Maintenance And Repair Services - Vehicles	2018-05-10	1010260631	Ultimate Shine 3 Minute Express Car Wash	420.00
54110	338	Maintenance And Repair Services - Vehicles	2018-05-17	1010260762	Drinnon, Kenny	209.99
54110	338	Maintenance And Repair Services - Vehicles	2018-05-17	1010260786	Royston Chrysler Dodge Jeep	3,298.87
54110	338	Maintenance And Repair Services - Vehicles	2018-05-17	1010260788	Synergy Auto Wash	413.94
54110	338	Maintenance And Repair Services - Vehicles	2018-05-24	1010260808	Drinnon, Kenny	93.45
54110	338	Maintenance And Repair Services - Vehicles	2018-05-31	1010260857	Drinnon, Kenny	371.74
54110	348	Postal Charges	2018-05-10	1010260602	Federal Express	18.30
54110	348	Postal Charges	2018-05-31	1010260883	UPS Store 5010	11.25
54110	351	Rentals	2018-05-10	1010260588	Canon Solutions America, Inc	173.21
54110	351	Rentals	2018-05-10	1010260624	T.E.G. Enterprises	65.00
54110	353	Towing Services	2018-05-10	1010260628	Tipton, Ronald	35.00
54110	353	Towing Services	2018-05-24	1010260829	Tipton, Ronald	25.00
54110	353	Towing Services	2018-05-24	1010260831	Xtreme Towing & Automotive Collision Center	150.00
54110	355	Travel	2018-05-24	1010260821	Mullins, Jimmy	229.50
54110	355	Travel	2018-05-24	1010260826	Suntrust Bankcard, NA	1,738.00
54110	355	Travel	2018-05-31	1010260851	Barker, David B	76.50
54110	355	Travel	2018-05-31	1010260871	Peralez, Joe	76.50
54110	399	Other Contracted Services	2018-05-03	1010260573	Transunion Risk & Alternative	32.40

Return to Committee Cover Page

COMMISSION APPROVAL LISTING
MONTHLY CHECKS

Fund: 101 General Fund #(101)

ACCT	OBJ	NAME	DATE	Check Nbr	Description	Amount Paid
54110	399	Other Contracted Services	2018-05-17	1010260778	Murrell Burglar Alarm Co Inc	10.00
54110	399	Other Contracted Services	2018-05-17	1010260781	Oath Holdings Inc.	126.60
54110	425	Gasoline	2018-05-17	1010260765	Fuelman	10,819.66
54110	431	Law Enforcement Supplies	2018-05-17	1010260763	Evident, Inc.	191.07
54110	431	Law Enforcement Supplies	2018-05-24	1010260826	Suntrust Bankcard, NA	416.42
54110	433	Lubricants	2018-05-17	1010260786	Royston Chrysler Dodge Jeep	240.70
54110	433	Lubricants	2018-05-17	1010260788	Synergy Auto Wash	42.99
54110	435	Office Supplies	2018-05-10	1010260606	Gall's Inc	336.25
54110	435	Office Supplies	2018-05-17	1010260784	R Chatfield Co, Inc	110.00
54110	435	Office Supplies	2018-05-24	1010260826	Suntrust Bankcard, NA	102.99
54110	435	Office Supplies	2018-05-31	1010260858	Evans Office Supply Co	1,494.34
54110	450	Tires And Tubes	2018-05-03	1010260559	Porter's Tire Store	99.95
54110	451	Uniforms	2018-05-24	1010260804	Catalog Marketplace	274.25
54110	451	Uniforms	2018-05-24	1010260812	Gall's Inc	531.99
54110	499	Other Supplies And Materials	2018-05-24	1010260826	Suntrust Bankcard, NA	146.77
54110	524	In Service/Staff Development	2018-05-03	1010260560	Professional and Technical Software Solutions, In	750.00
54110	524	In Service/Staff Development	2018-05-03	1010260578	UT Law Enforcement Innovation Center	399.00
54110	524	In Service/Staff Development	2018-05-10	1010260610	John E Reid & Associates Inc	575.00
54110	524	In Service/Staff Development	2018-05-31	1010260882	TN Law Enforcement Training Academy	9,900.00
54110	599	Other Charges	2018-05-03	1010260538	Hamblen County Clerk	29.00
54110	599	Other Charges	2018-05-03	1010260565	Shred-It	20.34
54110	599	Other Charges	2018-05-10	1010260600	English Mountain Spring Water	15.00
54110	599	Other Charges	2018-05-10	1010260607	Hamblen County Boat Dock, Inc	100.00
54110	599	Other Charges	2018-05-10	1010260609	Hamblen County Clerk	4.00
54110	599	Other Charges	2018-05-10	1010260612	Maryland Transportation Authority	1.44
54110	599	Other Charges	2018-05-10	1010260630	TruBlu Tactical Police Supply	347.00
54110	599	Other Charges	2018-05-24	1010260826	Suntrust Bankcard, NA	219.23
54110	599	Other Charges	2018-05-31	1010260860	Hamblen County Boat Dock, Inc	100.00
54110	599	Other Charges	2018-05-31	1010260876	Shred-It	20.34
54110	716	Law Enforcement Equipment	2018-05-10	1010260606	Gall's Inc	178.00
54110	**.....**	**Sheriff's Department**			**Total: 56**	**40,646.09**
54160	317	Data Processing Services	2018-05-03	1010260579	Verizon Wireless	34.00
54160	**.....**	**Administration Of The Sexual Offender Registry**			**Total: 1**	**34.00**
54210	335	Maintenance And Repair Service - Buildings	2018-05-03	1010260528	City Electric Supply	34.49
54210	335	Maintenance And Repair Service - Buildings	2018-05-03	1010260534	Fenco Supply Co	262.30
54210	335	Maintenance And Repair Service - Buildings	2018-05-03	1010260546	Lowe's	131.69
54210	335	Maintenance And Repair Service - Buildings	2018-05-03	1010260562	Relief Septic Service	900.00
54210	335	Maintenance And Repair Service - Buildings	2018-05-03	1010260580	Wholesale Supply Group	140.00
54210	335	Maintenance And Repair Service - Buildings	2018-05-10	1010260601	Fastenal Company	81.53
54210	335	Maintenance And Repair Service - Buildings	2018-05-10	1010260624	T.E.G. Enterprises	178.50
54210	335	Maintenance And Repair Service - Buildings	2018-05-10	1010260629	Town & Country Lock & Key	57.50

Return to Committee Cover Page

COMMISSION APPROVAL LISTING
MONTHLY CHECKS

Fund: 101 General Fund #(101)

ACCT	OBJ	NAME	DATE	Check Nbr	Description	Amount Paid
54210	335	Maintenance And Repair Service - Buildings	2018-05-24	1010260819	Johnson Controls Fire Protection LP	398.00
54210	335	Maintenance And Repair Service - Buildings	2018-05-24	1010260830	Waddell, Bill	175.00
54210	335	Maintenance And Repair Service - Buildings	2018-05-31	1010260878	TMS - Marlin	458.00
54210	335	Maintenance And Repair Service - Buildings	2018-05-31	1010260887	Waddell, Bill	175.00
54210	336	Maintenance And Repair Services - Equipment	2018-05-17	1010260792	Trane Co	1,970.77
54210	336	Maintenance And Repair Services - Equipment	2018-05-24	1010260823	Powerclean	295.00
54210	340	Medical And Dental Services	2018-05-03	1010260531	Correctional Risk Services Inc	8,755.84
54210	340	Medical And Dental Services	2018-05-10	1010260583	American Esoteric Laboratories	1,204.05
54210	340	Medical And Dental Services	2018-05-10	1010260594	Correctional Risk Services Inc	2,113.72
54210	340	Medical And Dental Services	2018-05-17	1010260759	Correcthealth, LLC	44,504.71
54210	340	Medical And Dental Services	2018-05-17	1010260760	Correctional Risk Services Inc	2,558.43
54210	340	Medical And Dental Services	2018-05-17	1010260773	Lakeway Regional Hospital	13,445.25
54210	340	Medical And Dental Services	2018-05-17	1010260776	Mobile Images Acquisition LLC	2,640.00
54210	340	Medical And Dental Services	2018-05-17	1010260777	Morristown-Hamblen Hospital	7,218.90
54210	340	Medical And Dental Services	2018-05-17	1010260789	Tennova Healthcare	14,962.79
54210	340	Medical And Dental Services	2018-05-24	1010260807	Correctional Risk Services Inc	2,546.93
54210	340	Medical And Dental Services	2018-05-31	1010260856	Correctional Risk Services Inc	365.83
54210	351	Rentals	2018-05-10	1010260588	Canon Solutions America, Inc	147.75
54210	355	Travel	2018-05-24	1010260801	Black, Linda	229.50
54210	355	Travel	2018-05-24	1010260811	Foster, Christina Marie	229.50
54210	355	Travel	2018-05-24	1010260815	Hambrick, Gerry M	229.50
54210	355	Travel	2018-05-24	1010260816	Hart, Dj	229.50
54210	355	Travel	2018-05-24	1010260826	Suntrust Bankcard, NA	299.94
54210	410	Custodial Supplies	2018-05-03	1010260527	Chem Clean Systems LLC	374.93
54210	410	Custodial Supplies	2018-05-03	1010260542	Kelsan Inc	3,324.54
54210	410	Custodial Supplies	2018-05-10	1010260632	Waste Industries/102 Tidiwaste	567.61
54210	410	Custodial Supplies	2018-05-24	1010260805	Chem Clean Systems LLC	964.85
54210	410	Custodial Supplies	2018-05-31	1010260866	Kelsan Inc	2,763.25
54210	413	Drugs And Medical Supplies	2018-05-17	1010260761	Diamond Drugs, Inc	14,462.13
54210	422	Food Supplies	2018-05-03	1010260521	Borden Dairy Of Ky / Flavorich	1,627.15
54210	422	Food Supplies	2018-05-10	1010260604	Flowers Baking Company	2,379.45
54210	422	Food Supplies	2018-05-10	1010260619	Pfg Hale , Inc	39,792.02
54210	435	Office Supplies	2018-05-31	1010260858	Evans Office Supply Co	619.20
54210	441	Prisoners Clothing	2018-05-31	1010260852	Bob Barker Company, Inc	1,323.54
54210	599	Other Charges	2018-05-10	1010260622	Shred-It	20.34
54210	599	Other Charges	2018-05-17	1010260777	Morristown-Hamblen Hospital	20.50
54210	599	Other Charges	2018-05-31	1010260852	Bob Barker Company, Inc	1,441.38
54210	710	Food Service Equipment	2018-05-31	1010260858	Evans Office Supply Co	172.97
54210	716	Law Enforcement Equipment	2018-05-03	1010260547	Marsh, Alicia	200.00
54210	716	Law Enforcement Equipment	2018-05-10	1010260613	Med Express, Inc	927.00
54210	716	Law Enforcement Equipment	2018-05-31	1010260858	Evans Office Supply Co	449.48
54210	790	Other Equipment	2018-05-31	1010260852	Bob Barker Company, Inc	1,556.40

Return to Committee Cover Page

COMMISSION APPROVAL LISTING
MONTHLY CHECKS

Fund: 101 General Fund #(101)

ACCT	OBJ	NAME	DATE	Check Nbr	Description			Amount Paid
54210	.....	**Jail**				**Total:**	**50**	**179,926.66**
54250	307	Communication	2018-05-03	1010260579	Verizon Wireless			102.84
54250	307	Communication	2018-05-10	1010260590	Century Link/Business Services			9.72
54250	307	Communication	2018-05-31	1010260886	Verizon Wireless			102.90
54250	338	Maintenance And Repair Services - Vehicles	2018-05-10	1010260618	NAPA Auto Parts Of Morristown			19.09
54250	349	Printing, Stationery And Forms	2018-05-17	1010260749	Acme Printing Company, Inc			570.00
54250	399	Other Contracted Services	2018-05-03	1010260539	Helen Ross McNabb Center			6,000.00
54250	399	Other Contracted Services	2018-05-17	1010260787	Stepping Out Ministries			550.00
54250	399	Other Contracted Services	2018-05-31	1010260862	Helen Ross McNabb Center			6,000.00
54250	425	Gasoline	2018-05-17	1010260765	Fuelman			159.92
54250	435	Office Supplies	2018-05-17	1010260782	Ortiz, Dreema			40.00
54250	435	Office Supplies	2018-05-24	1010260826	Suntrust Bankcard, NA			314.35
54250	435	Office Supplies	2018-05-31	1010260858	Evans Office Supply Co			358.54
54250	.....	**Work Release Program**				**Total:**	**12**	**14,227.36**
54410	307	Communication	2018-05-03	1010260519	Bell, Chris E			56.00
54410	338	Maintenance And Repair Services - Vehicles	2018-05-10	1010260620	Porter's Tire Store			49.95
54410	338	Maintenance And Repair Services - Vehicles	2018-05-17	1010260788	Synergy Auto Wash			8.00
54410	425	Gasoline	2018-05-17	1010260765	Fuelman			381.87
54410	435	Office Supplies	2018-05-03	1010260568	Thermocopy Of Tennessee			49.00
54410	599	Other Charges	2018-05-03	1010260579	Verizon Wireless			34.00
54410	599	Other Charges	2018-05-10	1010260605	Food City			19.39
54410	599	Other Charges	2018-05-10	1010260618	NAPA Auto Parts Of Morristown			15.66
54410	599	Other Charges	2018-05-24	1010260817	Horn, Lindsey E			19.98
54410	599	Other Charges	2018-05-24	1010260826	Suntrust Bankcard, NA			77.90
54410	708	Communication Equipment	2018-05-24	1010260826	Suntrust Bankcard, NA			34.62
54410	.....	**Civil Defense**				**Total:**	**11**	**746.37**
54610	312	Contracts With Private Agencies	2018-05-03	1010260536	Giles, Todd E			160.00
54610	312	Contracts With Private Agencies	2018-05-03	1010260541	Holt, Jeffrey E.			80.00
54610	312	Contracts With Private Agencies	2018-05-03	1010260558	Peoples, Jimmy W			120.00
54610	312	Contracts With Private Agencies	2018-05-03	1010260569	Thompson, Claude, JR			560.00
54610	312	Contracts With Private Agencies	2018-05-03	1010260570	Thompson, Tom C, MD			2,083.33
54610	312	Contracts With Private Agencies	2018-05-24	1010260817	Horn, Lindsey E			60.00
54610	312	Contracts With Private Agencies	2018-05-31	1010260867	Knox County Medical Examiner			1,890.50
54610	399	Other Contracted Services	2018-05-03	1010260532	Davis, Eddie			750.00
54610	.....	**County Coroner/Medical Examiner**				**Total:**	**8**	**5,703.83**
54900	790	Other Equipment	2018-05-17	1010260783	Peoples, Steve			471.34
54900	790	Other Equipment	2018-05-24	1010260826	Suntrust Bankcard, NA			12.98
54900	.....	**Other Public Safety**				**Total:**	**2**	**484.32**

Return to Committee Cover Page

COMMISSION APPROVAL LISTING
MONTHLY CHECKS

Fund: 101 General Fund #(101)

ACCT	OBJ	NAME	DATE	Check Nbr	Description			Amount Paid
55110	309	Contracts With Government Agencies	2018-05-03	1010260563	Roberts Cleaning Company			3,900.00
55110	309	Contracts With Government Agencies	2018-05-10	1010260584	AT&T			225.93
55110	309	Contracts With Government Agencies	2018-05-10	1010260590	Century Link/Business Services			55.16
55110	309	Contracts With Government Agencies	2018-05-10	1010260598	East TN Diamond			86.00
55110	309	Contracts With Government Agencies	2018-05-17	1010260751	Atmos Energy			80.83
55110	309	Contracts With Government Agencies	2018-05-17	1010260754	Canon Solutions America, Inc			16.94
55110	309	Contracts With Government Agencies	2018-05-17	1010260785	Reynolds, Benny			650.00
55110	309	Contracts With Government Agencies	2018-05-24	1010260810	English Mountain Coffee			79.80
55110	309	Contracts With Government Agencies	2018-05-24	1010260822	Olive Garden			240.68
55110	309	Contracts With Government Agencies	2018-05-31	1010260858	Evans Office Supply Co			167.50
55110	309	Contracts With Government Agencies	2018-05-31	1010260869	Morristown Utilities			1,435.00
55110	309	Contracts With Government Agencies	2018-05-31	1010260877	Stewart, Dennis J.			200.00
55110	355	Travel	2018-05-03	1010260515	Aguilar, Caroline M			51.70
55110	355	Travel	2018-05-03	1010260518	Becerra, Michele L			44.65
55110	355	Travel	2018-05-03	1010260535	Garcia, Beatriz R			38.54
55110	355	Travel	2018-05-03	1010260549	Mathes, Aliana A.			42.30
55110	355	Travel	2018-05-03	1010260555	Myers, Sharon			43.24
55110	355	Travel	2018-05-03	1010260566	Smith, Kim			290.44
55110	399	Other Contracted Services	2018-05-17	1010260775	Media Directions Advertising Inc.			1,235.29
55110	399	Other Contracted Services	2018-05-24	1010260806	Citizen Tribune			1,734.00
55110	.....	**Local Health Center**				**Total:**	**20**	**10,618.00**
55120	316	Contributions	2018-05-03	1010260553	Morristown-Hamblen Humane Soc			11,125.00
55120	.....	**Rabies And Animal Control**				**Total:**	**1**	**11,125.00**
55170	316	Contributions	2018-05-31	1010260862	Helen Ross McNabb Center			210.00
55170	.....	**Alcohol And Drug Programs**				**Total:**	**1**	**210.00**
55590	316	Contributions	2018-05-31	1010260862	Helen Ross McNabb Center			510.00
55590	.....	**Other Local Welfare Services**				**Total:**	**1**	**510.00**
56700	169	Part-Time Personnel	2018-05-31	1010260880	TN Community Assistance Corporation			2,665.00
56700	307	Communication	2018-05-03	1010260554	MUS Fibernet			124.01
56700	307	Communication	2018-05-03	1010260579	Verizon Wireless			49.84
56700	307	Communication	2018-05-31	1010260886	Verizon Wireless			49.84
56700	399	Other Contracted Services	2018-05-31	1010260889	Williams, Cindy			400.00
56700	410	Custodial Supplies	2018-05-10	1010260632	Waste Industries/102 Tidiwaste			474.52
56700	412	Diesel Fuel	2018-05-17	1010260795	Voyager Fleet Systems Inc			214.11
56700	415	Electricity	2018-05-03	1010260552	Morristown Utilities			164.00
56700	415	Electricity	2018-05-10	1010260617	Morristown Utilities			3,283.00
56700	415	Electricity	2018-05-24	1010260799	Appalachian Electric Co-Op			22.47
56700	425	Gasoline	2018-05-17	1010260795	Voyager Fleet Systems Inc			314.01
56700	451	Uniforms	2018-05-03	1010260520	BK Graphics			679.20

Return to Committee Cover Page

COMMISSION APPROVAL LISTING
MONTHLY CHECKS

Fund: 101 General Fund #(101)

ACCT	OBJ	NAME	DATE	Check Nbr	Description			Amount Paid
56700	454	Water And Sewer	2018-05-03	1010260552	Morristown Utilities			3,337.00
56700	499	Other Supplies And Materials	2018-05-03	1010260546	Lowe's			104.36
56700	599	Other Charges	2018-05-03	1010260580	Wholesale Supply Group			47.00
56700	599	Other Charges	2018-05-10	1010260600	English Mountain Spring Water			46.00
56700	599	Other Charges	2018-05-10	1010260616	Morristown Signs, Inc			100.00
56700	.....	**Parks And Fair Boards**				**Total:**	**17**	**12,074.36**
56900	309	Contracts With Government Agencies	2018-05-31	1010260865	Keep M'town Hamblen Beautiful			336.17
56900	.....	**Other Social, Cultural And Recreational**				**Total:**	**1**	**336.17**
57100	307	Communication	2018-05-10	1010260590	Century Link/Business Services			4.09
57100	355	Travel	2018-05-03	1010260540	Hobbs, Elizabeth			128.78
57100	355	Travel	2018-05-31	1010260863	Henry, Martha			23.50
57100	355	Travel	2018-05-31	1010260868	Long, Debra			47.47
57100	435	Office Supplies	2018-05-03	1010260567	The University Of TN Extension			1,276.00
57100	435	Office Supplies	2018-05-31	1010260858	Evans Office Supply Co			1,581.31
57100	.....	**Agricultural Extension Service**				**Total:**	**6**	**3,061.15**
57800	429	Instructional Supplies And Materials	2018-05-17	1010260770	Keep M'town Hamblen Beautiful			2,733.86
57800	.....	**Storm Water Management**				**Total:**	**1**	**2,733.86**
58300	307	Communication	2018-05-10	1010260590	Century Link/Business Services			2.75
58300	.....	**Veterans' Services**				**Total:**	**1**	**2.75**
58600	299	Other Fringe Benefits	2018-05-17	1010260769	Hamblen County Government			212.50
58600	.....	**Employee Benefits**				**Total:**	**1**	**212.50**
58900	399	Other Contracted Services	2018-05-10	1010260593	City of Morristown			417.36
58900	.....	**Miscellaneous**				**Total:**	**1**	**417.36**
					Total of checks for General Fund #(101)			**489,122.95**

Return to Committee Cover Page

COMMISSION APPROVAL LISTING
MONTHLY CHECKS

Fund: 116 Solid Waste/Sanitation Fund #(116)

ACCT	OBJ	NAME	DATE	Check Nbr	Description	Amount Paid
55710	299	Other Fringe Benefits	2018-05-17	1160023348	Hamblen County Government	37.50
55710	336	Maintenance And Repair Services - Equipment	2018-05-03	1160023334	Premier Truck Group	1,482.88
55710	336	Maintenance And Repair Services - Equipment	2018-05-10	1160023337	Bayne Machine Works	895.42
55710	336	Maintenance And Repair Services - Equipment	2018-05-10	1160023341	Moore's Tractor & Trailer	590.54
55710	336	Maintenance And Repair Services - Equipment	2018-05-10	1160023342	NAPA Auto Parts Of Morristown	1,602.07
55710	336	Maintenance And Repair Services - Equipment	2018-05-10	1160023343	Triad Freightliner	623.53
55710	336	Maintenance And Repair Services - Equipment	2018-05-17	1160023344	Distinct Finishes	450.00
55710	359	Disposal Fees	2018-05-03	1160023331	Hamblen County-Morristown Solid Waste	69,159.25
55710	412	Diesel Fuel	2018-05-17	1160023345	Fuelman	11,651.83
55710	425	Gasoline	2018-05-17	1160023345	Fuelman	330.29
55710	446	Small Tools	2018-05-24	1160023352	Snap-On Tools	1,926.95
55710	451	Uniforms	2018-05-31	1160023353	Cintas Corp., Loc. 207	677.13
55710	499	Other Supplies And Materials	2018-05-03	1160023332	Lawson Products, Inc	281.53
55710	499	Other Supplies And Materials	2018-05-10	1160023338	Cocke Farmers Co-Op	100.00
55710	499	Other Supplies And Materials	2018-05-10	1160023339	Kennedy, Thomas A.	109.85
55710	499	Other Supplies And Materials	2018-05-24	1160023351	Big M Janitorial	1,342.76
55710	499	Other Supplies And Materials	2018-05-31	1160023353	Cintas Corp., Loc. 207	114.99
55710	.....	**Sanitation Management**			**Total: 17**	**91,376.52**
					Total of checks for Solid Waste/Sanitation Fund #(116)	**91,376.52**

Return to Committee Cover Page

COMMISSION APPROVAL LISTING
MONTHLY CHECKS

Fund: 131 Highway/Public Works Fund (#131)

ACCT	OBJ	NAME	DATE	Check Nbr	Description			Amount Paid
61000	307	Communication	2018-05-03	1313041759	Comcast Cable			66.00
61000	307	Communication	2018-05-03	1313041768	Verizon Wireless			151.88
61000	307	Communication	2018-05-10	1313041769	AT&T			77.46
61000	317	Data Processing Services	2018-05-24	1313041792	Gravity Networks			135.00
61000	415	Electricity	2018-05-03	1313041762	Morristown Utilities			29.00
61000	415	Electricity	2018-05-24	1313041793	Holston Electric Cooperative			541.30
61000	415	Electricity	2018-05-31	1313041799	Morristown Utilities			58.00
61000	435	Office Supplies	2018-05-31	1313041798	Evans Office Supply Co			5.35
61000	454	Water and Sewer	2018-05-17	1313041783	Morristown Utilities			74.00
61000	599	Other Charges	2018-05-03	1313041760	Lowe's			199.10
61000	599	Other Charges	2018-05-03	1313041761	Mathis, Jason			3,300.53
61000	599	Other Charges	2018-05-10	1313041772	Elliott Boots			100.00
61000	599	Other Charges	2018-05-24	1313041788	Cintas Corp., Loc. 207			85.69
61000	599	Other Charges	2018-05-24	1313041789	Elliott Boots			100.00
61000	599	Other Charges	2018-05-24	1313041790	First Impression Printing			54.50
61000	599	Other Charges	2018-05-24	1313041794	Kennedy, Thomas A.			95.85
61000	599	Other Charges	2018-05-24	1313041795	Rouse, Rusty			153.64
61000	599	Other Charges	2018-05-24	1313041796	Suntrust Bankcard, NA			224.42
61000	599	Other Charges	2018-05-31	1313041797	Cintas Corp., Loc. 207			224.98
61000	.....	**Administration**				**Total:**	**19**	**5,676.70**
62000	404	Asphalt - Hot Mix	2018-05-17	1313041779	Duracap Asphalt Paving Co, Inc			4,841.07
62000	404	Asphalt - Hot Mix	2018-05-17	1313041785	Newport Paving & Ready Mix			13,905.32
62000	409	Crushed Stone	2018-05-10	1313041777	Vulcan Materials Company			3,883.52
62000	426	General Construction Materials	2018-05-10	1313041771	Cocke Farmers Co-Op			129.50
62000	443	Road Signs	2018-05-24	1313041791	G & C Supply Co			2,015.11
62000	451	Uniforms	2018-05-31	1313041797	Cintas Corp., Loc. 207			492.92
62000	.....	**Highway And Bridge Maintenance**				**Total:**	**6**	**25,267.44**
63100	412	Diesel Fuel	2018-05-10	1313041771	Cocke Farmers Co-Op			1,562.31
63100	412	Diesel Fuel	2018-05-17	1313041780	Fuelman			2,096.95
63100	416	Equipment Parts - Heavy	2018-05-10	1313041775	NAPA Auto Parts Of Morristown			110.37
63100	416	Equipment Parts - Heavy	2018-05-17	1313041782	Interstate Tractor			460.54
63100	416	Equipment Parts - Heavy	2018-05-24	1313041787	Action Auto Glass			425.00
63100	424	Garage Supplies	2018-05-10	1313041776	Scott-Gross Co Inc			105.93
63100	425	Gasoline	2018-05-10	1313041770	BP			185.60
63100	425	Gasoline	2018-05-17	1313041780	Fuelman			1,174.22
63100	446	Small Tools	2018-05-10	1313041775	NAPA Auto Parts Of Morristown			1,243.57
63100	450	Tires And Tubes	2018-05-10	1313041773	Goforth Tire & Auto, Inc			580.40
63100	.....	**Operation And Maintenance Of Equipment**				**Total:**	**10**	**7,944.89**
					Total of checks for Highway/Public Works Fund (#131)			**38,889.03**

Return to Committee Cover Page

RESOLUTION NO. ____

RESOLUTION TO WAIVE THE COUNTY MOTOR VEHICLE TAX FOR VEHICLES RECEIVING EXEMPTION UNDER CHAPTER 923 OF THE PUBLIC ACTS OF 2018 FOR VOLUNTEER FIREFIGHTERS AND RESCUE SQUAD PERSONNEL

WHEREAS, the General Assembly of the State of Tennessee has enacted an exemption from the applicable motor vehicle registration fee and renewal fee for one motor vehicle owned or used by a volunteer firefighter or a member of a volunteer local rescue squad having at least one year of service, as provided in Chapter 923 of the Public Acts of 2018; and

WHEREAS, the General Assembly, in passing Chapter 923 of the Public Acts of 2018, amended *Tennessee Code Annotated* §§ 55-4-241 and 55-4-222, and enacted a new section in Title 55, Chapter 4, Part 1, authorizing a county legislative body to waive the county motor vehicle tax for motor vehicles receiving an exemption from the state registration and renewal fees under those statutes if the waiver is approved in the same manner as the adoption of the motor vehicle tax under *Tennessee Code Annotated* § 5-8-102; and

WHEREAS, the county legislative body of _____ County has determined it to be in the best interest of _____ County that the county's motor vehicle tax be waived for one motor vehicle owned or used by a volunteer firefighter or a member of a volunteer local rescue squad having at least one year of service, as provided in Chapter 923 of the Public Acts of 2018;

NOW, THEREFORE BE IT RESOLVED, by the County Legislative Body of _____ County, Tennessee, meeting in _____ session on this ____ day of _____, 20__, at _____ Tennessee, that:

SECTION 1. The county motor vehicle tax is hereby waived for one motor vehicle owned or used by a volunteer firefighter or a member of a volunteer local rescue squad having at least one year of service, which vehicle meets the requirements for exemption from the state registration and renewal fees as provided in Chapter 923 of the Public Acts of 2018.

SECTION 2. This Resolution shall be effective upon its passage and approval at two consecutive, regularly scheduled meetings of the county legislative body, the public welfare requiring it.

Passed 1st reading at the regular _____, 20__, meeting of the _____ County legislative body.

Passed 2nd reading at the regular _____, 20__, meeting of the _____ County legislative body.

APPROVED: ATTEST:

_____ _____

County Mayor County Clerk

State of Tennessee

PUBLIC CHAPTER NO. 923

SENATE BILL NO. 270

By Pody, Watson, Bailey, Bowling, Haile, Ketron, Yager

Substituted for: House Bill No. 268

By Sherrell, Terry, Powers, Sparks, Whitson, Weaver, Hulsey, Howell, Matheny, Curcio, Swann, Crawford, Lollar, McDaniel, Van Huss, Reedy, Kane, Goins, Hawk, Matlock, Calfee, Zachary, Kumar, Tillis, Cameron Sexton, Kevin Brooks, Gilmore, Matthew Hill, Ragan, Coley, Akbari, Carter, Casada, Wirgau, Daniel, Carr, Littleton, Parkinson, Butt, Hazlewood, Alexander, Williams, Pitts, DeBerry, Hardaway, Eldridge, Gant, Rudd, Staples, Jerry Sexton, Holsclaw, Johnson, Timothy Hill, Pody, Dunn, Forgety, Faison, Dawn White, Sanderson, Camper, Hicks, Marsh, Keisling, Moody, Smith, Holt, Jernigan, Mitchell, Thompson, Halford, Doss, Ramsey, Harry Brooks, Byrd, Vaughan; Madam Speaker Harwell; Moon, Lamberth, Rogers, Farmer, Gravitt, Windle, Cooper, Boyd, Mark White

AN ACT to amend Tennessee Code Annotated, Title 55, Chapter 4, relative to fees for registration plates issued to certain emergency personnel.

BE IT ENACTED BY THE GENERAL ASSEMBLY OF THE STATE OF TENNESSEE:

SECTION 1. Tennessee Code Annotated, Section 55-4-241(a), is amended by adding the following at the end of the subsection immediately preceding the period (.):

; except, that any active volunteer firefighter who has at least one (1) year of service shall be exempt, at the time of renewal, from the applicable registration fee for only one (1) motor vehicle, upon the certification or sworn statement from the chief of the fire department to which the person is attached confirming the person is an active volunteer firefighter. In addition to the exemption provided by this subsection (a), the legislative body of a county is authorized to waive the motor vehicle tax for motor vehicles receiving an exemption under this subsection (a) from the registration fee if the waiver is approved in the same manner as the adoption of the motor vehicle tax under § 5-8-102

SECTION 2. Tennessee Code Annotated, Section 55-4-222(d), is amended by adding the following at the end of the first sentence immediately preceding the period (.):

; except, that any active volunteer member of a local rescue squad who has at least one (1) year of service shall be exempt, at the time of renewal, from the regular license fee for only one (1) motor vehicle, upon the certification or sworn statement from the captain of the local rescue squad to which the person is attached confirming the person is an active volunteer member. In addition to the exemption provided by this subsection (d), the legislative body of a county is authorized to waive the motor vehicle tax for motor vehicles receiving an exemption under this subsection (d) from the registration fee if the waiver is approved in the same manner as the adoption of the motor vehicle tax under § 5-8-102

SECTION 3. Tennessee Code Annotated, Title 55, Chapter 4, Part 1, is amended by adding the following as a new section:

(a) Any owner or lessee of a motor vehicle who is a resident of this state, is an active member of a volunteer fire department, and has at least one (1) year of service shall be exempt, at the time of renewal, from the regular registration fee imposed pursuant to § 55-4-111, for only one (1) vehicle owned or used by the firefighter, upon the certification or sworn statement from the chief of the fire department to which the person is attached confirming the applicant is an active volunteer member, and upon compliance with state motor vehicle registration and licensing laws. In addition to the exemption provided by this subsection (a), the legislative body of a county is authorized to waive the motor vehicle tax for motor

vehicles receiving an exemption under this subsection (a) from the registration fee if the waiver is approved in the same manner as the adoption of the motor vehicle tax under § 5-8-102.

(b) Any owner or lessee of a motor vehicle who is a resident of this state, is an active member of a volunteer local rescue squad, and has at least one (1) year of service shall be exempt, at the time of renewal, from the regular registration fee imposed pursuant to § 55-4-111, for only one (1) vehicle owned or used by the member, upon certification or sworn statement from the captain of the local rescue squad to which the person is attached confirming the applicant is an active volunteer member, and upon compliance with state motor vehicle registration and licensing laws. In addition to the exemption provided by this subsection (b), the legislative body of a county is authorized to waive the motor vehicle tax for motor vehicles receiving an exemption under this subsection (b) from the registration fee if the waiver is approved in the same manner as the adoption of the motor vehicle tax under § 5-8-102.

SECTION 4. This act shall take effect upon becoming a law, the public welfare requiring it, and shall apply to registration plates renewed on or after that date.

SENATE BILL NO. 270

PASSED: April 18, 2018

RANDY McNALLY
SPEAKER OF THE SENATE

BETH HARWELL, *SPEAKER*
HOUSE OF REPRESENTATIVES

APPROVED this 15th **day of** May **2018**

BILL HASLAM, *GOVERNOR*

Return to Committee Cover Page

MEMORANDUM OF AGREEMENT
BETWEEN THE TENNESSEE DEPARTMENT OF TRANSPORTATION
AND HAMBLEN COUNTY

This Memorandum of Agreement, made and entered into on this _____ day of _____, 2018, by and between the Department of Transportation of the State of Tennessee, hereinafter called "DEPARTMENT" and Hamblen County, hereinafter called "COUNTY".

WHEREAS, the COUNTY desires to purchase, install, operate, and maintain the hereinafter described highway traffic control device on a state route within its jurisdiction; and,

WHEREAS, the DEPARTMENT has an interest in traffic flow and safety on state highways, as they may be affected by the installation of a highway traffic control device; and

WHEREAS, T.C.A., Section 54-5-108(b), requires that all highway traffic control devices in Tennessee conform with the Manual on Uniform Traffic Control Devices (MUTCD) as adopted by the DEPARTMENT.

NOW, THEREFORE, in consideration of these premises, the parties hereto agree as follows:

1. The Department authorizes the COUNTY to provide for the installation of a highway traffic control device at the location and of the type as follows:

LOCATION	**TYPE**
SR 160 **near Union Heights Elementary School**	**35 MPH School Flashing Beacon**

2. It is agreed that the COUNTY shall purchase and install said device, *or authorize a contractor and/or developer to purchase and/or install said device,* and thereafter the *COUNTY shall* operate, maintain, and guarantee that it, or some other governmental entity, will pay for electricity to the same, all without expense to the DEPARTMENT.

3. It is further agreed by the COUNTY that should roadway or traffic conditions change such that said device is no longer justified under the provisions of the MUTCD, the COUNTY, after reasonable notice from the DEPARTMENT, to remove the same at no expense to the DEPARTMENT.

4. The COUNTY agrees to accept this Memorandum of Agreement by lawful governmental action.

IN WITNESS WHEREOF, the parties hereto have caused their duly-authorized officials to execute this Memorandum of Agreement on the date written.

HAMBLEN COUNTY

_____
Name

_____
Title

TENNESSEE DEPARTMENT OF TRANSPORTATION

_____
John Schroer
Commissioner

APPROVED AS TO FORM AND LEGALITY:

_____
Attorney

_____
John H. Reinbold
General Counsel

File No.

Revised February 9, 2016

Return to Committee Cover Page

Memorandum of Understanding
Between the Hamblen County Board of Education
And Hamblen County Government

This Memorandum of Understanding, made and entered into on this 21st day of June 2018 by and between the Hamblen County Board of Education, hereafter called "HCBOE" and Hamblen County Government, hereafter called "COUNTY."

WHEREAS, the HCBOE plans to install 35 MPH flashing beacons along SR 160 to help manage traffic near Union Heights Elementary School;

WHEREAS, the devices will be installed and operated according to TCA, Section 54-5-108(b), that requires all highway traffic safety control devices in Tennessee to conform with the Manual on Uniform Traffic Control Devices (MUTCD);

WHEREAS, the COUNTY has entered into a memorandum of agreement with the Department of Transportation of the State of Tennessee that it will purchase and install the devices or authorize a contractor and/or developer to purchase and/or install the flashing beacons and thereafter, the COUNTY, shall operate, maintain and guarantee that it, or some other governmental entity, will pay for the electricity for the device.

NOW, THEREFORE, in consideration of these premises, the HCBOE, as owner of subject beacons, shall be solely responsible for their installation, operation, maintenance/repair, will provide electrical service required for operation and will hold County harmless and will indemnify County should any person or entity seek to assert any liability claim against County in connection with the beacons' operation or failure to operate.

IN WITNESS WHEREOF, the parties hereto have caused their duly-authorized officials to execute this Memorandum of Understanding.

HAMBLEN COUNTY GOVERNMENT	HAMBLEN COUNTY BOARD OF EDUCATION
_____	_____
Name	Name
_____	_____
Title	Title
_____	_____
Date	Date

TENNESSEE
Hamblen County
SERVICE · COMMUNITY · INDUSTRY
OFFICE OF THE MAYOR

June 7, 2018

To: Randy DeBord, Chairman
HCLB Finance Committee

From: Bill Brittain, County Mayor BB

Re: E-911 Reimbursement

Last year, County Commission adopted my recommendation to transition the Emergency Communication District employees off of the County's health insurance plan. The transition was completed as of January 1, 2018. Subsequently, E-911 employees and their dependents became members of the State of Tennessee's health insurance plan.

Part of the transition plan included a request that the E-911 Board reimburse the County $50,000. This reimbursement would be used to offset a portion of the shortfall incurred by the County over a three year period. During this time frame, claims associated with E-911 employees and their dependents exceeded premium payments to the County by roughly $300,000.

I am asking that the County reduce its reimbursement request from the E-911 Board to $30,000, representing the amount of the shortfall incurred by the County in FY 2017-18. We anticipate the County will build its reserves in the self-insured health fund this fiscal year. As a result, the reimbursement from E-911 will not be as critical as anticipated a year ago.

Do not hesitate to call me with any questions or concerns.

Bill Brittain, *County Mayor*
511 West Second North Street • Morristown, TN 37814 • *office.* 423.586.1931 • *fax.* 423.585.4699
www.HamblenCountyTN.gov • *email.* bbrittain@co.hamblen.tn.us

TENNESSEE
Hamblen County
SERVICE • COMMUNITY • INDUSTRY
OFFICE OF THE MAYOR

June 7, 2018

To: Randy DeBord, Chairman
HCLB Finance Committee

From: Bill Brittain, County Mayor BB

Re: Cherokee Park Playground/Bathhouse Project

There is good news and bad news regarding the playground and bathhouse project at Cherokee Park.

First the good news, the playground equipment is ordered and came under budget. It should be installed within 60 days replacing the playground near the splash pad.

Second the bad news, the bids received to build a bathhouse to replace the one in the back campground are significantly over budget. The project architect doesn't believe rebidding the project will result in a significantly lower cost unless major revisions are made to the plans such as removing the heat, insulation and replacing the split faced block with painted block.

We have learned that the State of Tennessee has additional grant funds available to pay 50% of the overage. Hamblen County must supply a 50% match. **I am asking for a grant match not to exceed $95,000 to complete the project. The County must commit to supplying the match before the additional grant money will be awarded.**

The County has $51,000 we can apply to the match. The balance (up to $44,000) would come from the General Fund (#101) fund balance. The revenue sources for the grant match are:

- Cherokee Park FY 17-18 Budget $10,000
- Cherokee Park FY 18-19 Budget $10,000
- Sale of old playground equipment $11,000
- Reserved Insurance Proceeds $20,000
- General Fund (#101) Fund Balance $44,000

Do not hesitate to contact me with any questions.

Bill Brittain, *County Mayor*
511 West Second North Street • Morristown, TN 37814 • *office.* 423.586.1931 • *fax.* 423.585.4699
www.HamblenCountyTN.gov • *email.* bbrittain@co.hamblen.tn.us

Return to Committee Cover Page

Hamblen County, Tennessee Bid Tabulation

Bid Name: New Bathhouse Cherokee Park (2018-04)

Department: Cherokee Park

Date Bids Opened: 5/7/2018 @ 2:00p.m.

Finance Committee Review: 6/11/2018

Co. Commission Review: 6/21/2018

Bid Advertisement:

- Citizen Tribune Newspaper - Public Notice
- Citizen Tribune Newspaper (online) - Public Notice
- Hamblen County Government Website
- Emailed 21 Approved Vendors
- Listed with Builders Exchange

Vendors Bidding

Contractor	License #	Addenda		Bid Amount	Days to Complete	Bid Bond
		1	2			
K & F Construction	46162	✓	✓	$ 324,000.00	120	✓
Andrews & Hoskins Construction	22722	✓	✓	$ 311,000.00	90	✓
The Daniel Co, Danco Inc	18967	✓	✓	$ 307,000.00	150	✓

Return to Committee Cover Page

CHEROKEE PARK BATHHOUSE

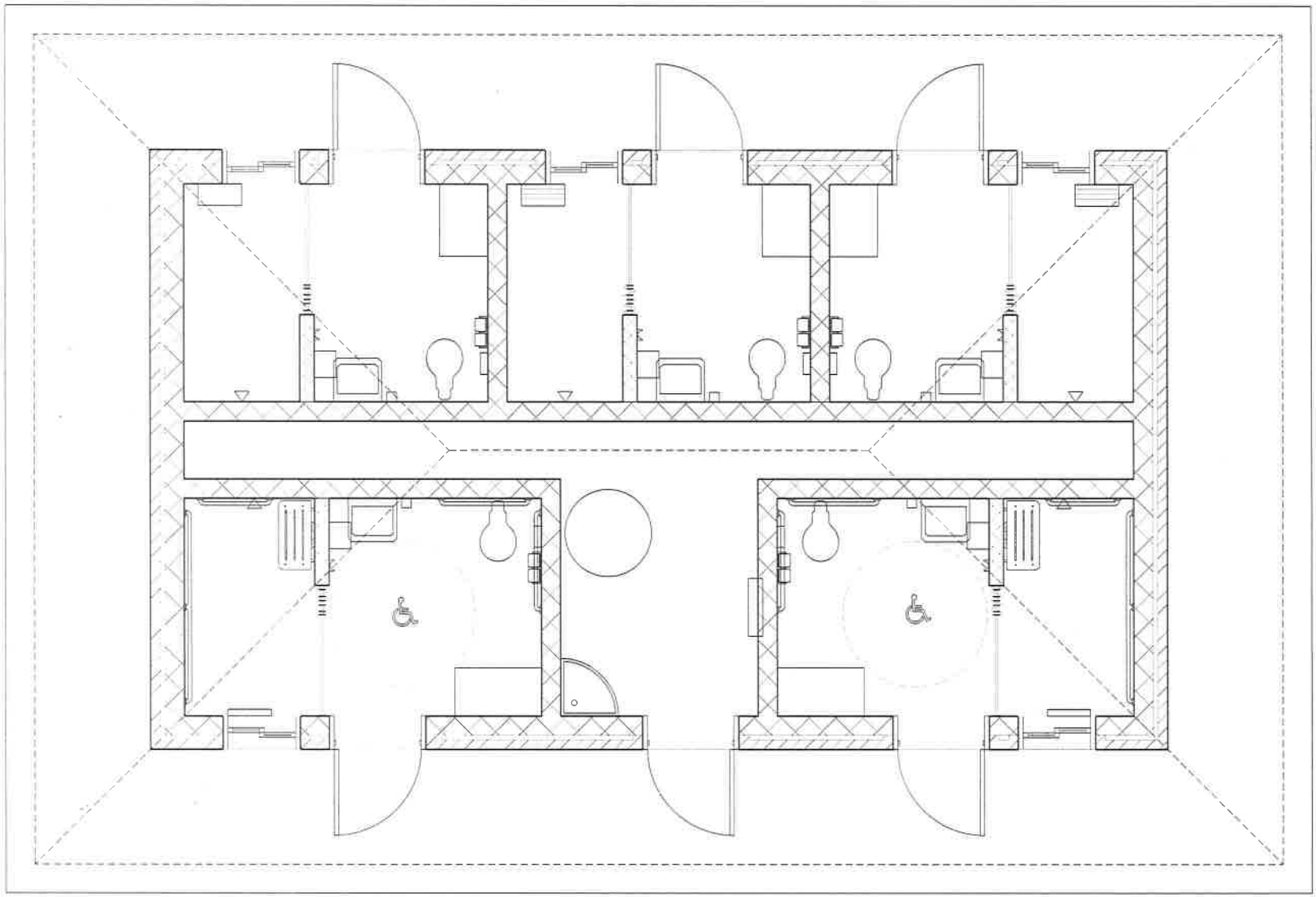

730 SF

HAMBLEN COUNTY DEPARTMENT OF EDUCATION

210 East Morris Boulevard
Morristown, Tennessee 37813
Phone (423) 586-7700 • Fax (423) 586-7747

The mission of Hamblen County Schools is to educate students so they can be challenged to successfully compete in their chosen fields.

BOARD OF EDUCATION

Shahin Assadnia

Carolyn Clawson

Joe Gibson, Jr.

Roger Greene

James Grigsby

Janice Haun

Clyde Kinder

TO: BILL BRITTAIN

FROM: TRACI ANTRICAN TA

DATE: JUNE 4, 2018

RE: LEASE OF MODULAR CLASSROOMS

Attached please find a three-year renewal of our seven modular classrooms. If the board renews for a three-year period, the district will save around $22,000 in lease payments. There is a clause in the contract that we may cancel the contract after two years with a 90-day notification to Spectrum.

The three-year lease has been placed on the June 12, 2018 agenda for board approval. The board requests approval from the County Commission pending board approval. Approval from the Commission is required because the board moving from a year to year rental to a 36-month lease.

If you have any questions, please feel free to contact me. Thank you for your consideration.

SPECTRUM

Spectrum Leasing, LLC

EQUIPMENT SCHEDULE NUMBER 006

This Equipment Schedule is made by and between Spectrum Leasing, LLC as Lessor and Hamblen County Department of Education located at 210 E Morris Blvd, Morristown, TN 37813 as Lessee as of the Delivery Date specified below. This Equipment Schedule constitutes an addition to the Master Equipment Lease Agreement dated August 31, 2012 executed by the parties. This Equipment Schedule is subject to the Master Equipment Lease Agreement, the General Terms and Conditions incorporated therein and the terms, provisions and specifications set forth herein.

Lessee: Hamblen County Department of Education

Delivery Address: Various locations. Locations listed below along with equipment specifications.

Location Contact: Jeff Seay Ph: 423-587-4800 Fax: 423-585-3760 Cell: _____

Email: seayj@hcboe.net

Billing Address: 210 East Morris Boulevard, Morristown, TN 37813

Billing Contact: Traci Antrican Email: antricant@hcboe.net

Purchase Order Number (if any): _____

Delivery Date: existing on site Lease Start Date if Different: 07/01/18

Equipment Value: $ 691,600.00

RENEWAL OF EXISTING LEASES:

Serial Number/Project #:	Equipment Schedule #:	Size/Description
DBI-5087A-C / 12-285	001	One (1) 36'x70' modular classroom building w/RR and bar sink – location: Fairview Marguerite School, 2125 Fairview Rd. Morristown, TN 37814
DBI-5538A-C / 13-009	002	One (1) 36'x70' modular classroom building w/RR and bar sink – location: Fairview Marguerite School, 2125 Fairview Rd. Morristown, TN 37814
DBI-5917A-C / 14-004	003	One (1) 36'x70' modular classroom building w/RR and bar sink – location: Alternative School, 376 Snyder Rd. Morristown, TN
DBI-6348A-C / 15-007	004	One (1) 36'x70' modular classroom building w/RR and bar sink – location: Hillcrest Elementary School, 407 S. Liberty Hill Rd., Morristown, TN 37813
DBI-6823A-C / 16-013	005	One (1) 36'x70' modular classroom building/ kiddies RR, ADA RR and bar sink – location, Hillcrest Elementary School, 407 S Liberty Rd. Morristown,

Initial _____

		TN 37813
DBI-6824A-C / 16-013	005	36'x70' modular classroom building w/kiddies RR, ADA RR and bar sink – location: Alternative School, 376 Snyder Rd., Morristown, TN
DBI-6825A-C / 16-013	005	36'x70' modular classroom building w/kiddies RR, ADA RR and bar sink – location: Alternative School, 376 Snyder Rd., Morristown, TN

Monthly Lease Payment: $ 12,247.00 (plus applicable taxes and fees)

Mail Lease Payments To: Spectrum Leasing, LLC PO Box 2849 Gainesville, GA 30503

Minimum Lease Term (months): 36 Months – with no cancellation penalty after 24 months and 90 days notification.

Lease Renewal Options (if any): Available upon Request

Purchase Options (if any): N/A

Delivery: $ Currently On Site – N/A

Set-Up & Building Installation Charges: $ Currently On Site – N/A

Install Building Skirting: $ Currently On Site – N/A

Other one-time project costs: None

Dismantle Charges: Prevailing rate - See below

Return Freight Charges: Prevailing rate - See below

(Lessee is responsible for all Dismantle and Return Freight Charges. Any amounts listed here for Dismantle or Return Freight Charges are estimates only and the costs will be billed to Lessee at the prevailing rates at the time services are rendered.)

Equipment shall be returned to: 1716 Candler Rd, Gainesville, GA 30507

First Month's Rent, Security Deposit & Delivery charges due on contract execution, Set-up and Building Installation charges due at time of completion of installation. Other one-time project costs are due at time of completion of those services unless otherwise specified in writing.

LESSEE: Hamblen County BOE	LESSOR: Spectrum Leasing, LLC
Signature	Signature
Print Name	Print Name
Title	Title
Date	Date

Initial _____

TENNESSEE
Hamblen County
SERVICE • COMMUNITY • INDUSTRY
OFFICE OF THE MAYOR

Hamblen County Commission

Month JUNE Year 2018

Fund #101 *DEPT:* GENERAL FUND - VARIOUS (#1)

Account Number	Description	Increase	Decrease
	INCREASE EXPENDITURE APPROPRIATIONS:		
	SOIL CONSERVATION		
57500.207	Medical Insurance	850	
	EMPLOYEE BENEFITS		
58600.312	Contracts with Private Agencies		850
	To increase appropriations for increased insurance cost for FY17-18 above budgeted amount		
	COUNTY COMMISSION		
51100.207	Medical Insurance	7,500	
	EMPLOYEE BENEFITS		
58600.312	Contracts with Private Agencies		7,500
	To increase appropriations for increased insurance cost for FY17-18 above budgeted amount		
	PLANNING AND ZONING		
51720.101	Administrative Officer	1,161	
51720.161	Secretary		1,161
	To increase appropriations due to payout of compensation time		
	OTHER FACILITIES / MAINTENANCE		
51810.415	Electricity	60,000	
	DECREASE FUND BALANCE		
39000.000	Unassigned Fund Balance		60,000
	To increase appropriations due to an increase in utility expense		

Return to Committee Cover Page

TENNESSEE
Hamblen County
SERVICE • COMMUNITY • INDUSTRY
OFFICE OF THE MAYOR

Hamblen County Commission

Month JUNE Year 2018

Fund #101 *DEPT:* GENERAL FUND - VARIOUS (#1)

Account Number	Description	Increase	Decrease
	OTHER FACILITIES / MAINTENANCE		
51810.105	Supervisor / Director	185	
51810.169	Part-Time Personnel		185
51810.207	Medical Insurance	900	
51810.169	Part-Time Personnel		900
	To increase appropriations for additional amounts needed for FY17-18 above budgeted amounts		
	ACCOUNTING AND BUDGETING		
52100.101	Administrative Officer	11,250	
52100.119	Accountants and Bookkeepers	660	
52100.204	State Retirement	650	
52100.206	Life Insurance	10	
52100.212	Employer Medicare	150	
52100.187	Overtime Pay		3,000
52100.207	Medical Insurance		5,000
52100.312	Contracts with Private Agencies		1,500
52100.334	Maintenance Agreements		3,220
	To provide for payout of accumulated compensation and accrued annual leave when Finance Director resigned and to budget for new Finance Director		

TENNESSEE
Hamblen County
SERVICE • COMMUNITY • INDUSTRY
OFFICE OF THE MAYOR

Hamblen County Commission

Month JUNE Year 2018

Fund #101 *DEPT:* GENERAL FUND - VARIOUS (#1)

Account Number	Description	Increase	Decrease
	JUVENILE COURT		
53500.164	Attendants	3,000	
53500.212	Employer Medicare	200	
53500.309	Contracts with Private Agencies	7,345	
53500.425	Gasoline	115	
53500.111	Probation Officer		700
53500.207	Medical Insurance		1,550
53500.204	State Retirement		450
53500.524	In-Service / Staff Development		115
	DECREASE FUND BALANCE		
39000.000	Unassigned Fund Balance		7,845
	To increase appropriations for additional amounts needed for FY17-18 above budgeted amounts		
	COURTROOM SECURITY		
53920.106	Deputies	6,500	
53920.110	Lieutenants	1,450	
53920.115	Sergeants	1,200	
53920.169	Part-Time Personnel	48,000	
53920.187	Overtime Pay	61,500	
53920.201	Social Security	9,000	
53920.204	State Retirement	8,300	
53920.206	Life Insurance	50	
53920.207	Medical Insurance	16,000	
53920.212	Employer Medicare	2,300	
	DECREASE FUND BALANCE		
39000.000	Unassigned Fund Balance		154,300
	To increase appropriations for additional amounts needed for FY17-18 above budgeted amounts		

Return to Committee Cover Page

TENNESSEE
Hamblen County
SERVICE • COMMUNITY • INDUSTRY
OFFICE OF THE MAYOR

Hamblen County Commission

Month JUNE Year 2018

Fund #101 *DEPT:* GENERAL FUND - VARIOUS (#1)

Account Number	Description	Increase	Decrease
	SHERIFF'S DEPARTMENT		
54110.109	Captains	100	
54110.110	Lieutenants	4,000	
54110.115	Sergeants		4,100
	To increase appropriations for additional amounts needed for FY17-18 above budgeted amounts		
	JAIL		
54210.340	Medical Supplies	150,000	
54210.410	Custodial Supplies	15,000	
54210.413	Drugs and Medical Supplies	25,000	
54210.441	Prisoners Clothing	500	
54210.160	Guards		190,500
	To increase appropriations for additional amounts needed for FY17-18 above budgeted amounts		
	WORK RELEASE PROGRAM		
54250.189	Other Salaries and Wages	3,800	
54250.207	Medical Insurance	550	
54250.338	Maintenance and Repair Services - Vehicles		2,175
54250.399	Other Contracted Services		2,175
	To increase appropriations for additional amounts needed for FY17-18 above budgeted amounts		

Return to Committee Cover Page

TENNESSEE
Hamblen County
SERVICE • COMMUNITY • INDUSTRY
OFFICE OF THE MAYOR

Hamblen County Commission

Month JUNE Year 2018

Fund #101 *DEPT:* GENERAL FUND - VARIOUS (#1)

Account Number	Description	Increase	Decrease
	PARKS AND FAIR BOARDS		
56700.105	Supervisor / Director	450	
56700.187	Overtime Pay	7,800	
56700.201	Social Security	200	
56700.204	State Retirement	450	
56700.207	Medical Insurance	350	
56700.212	Employer Medicare	150	
56700.415	Electricity	5,500	
56700.454	Water and Sewer	5,500	
56700.506	Liability Insurance		4,100
56700.412	Diesel Fuel		2,500
56700.513	Workers Comp Insurance		3,600
56700.599	Other Charges		900
	DECREASE FUND BALANCE		
39000.000	Unassigned Fund Balance		9,300
	To increase appropriations for additional amounts needed for FY17-18 above budgeted amounts		

Signature: Anne Bryant-Hurst

Title : Finance Director

Date: 6-8-2018

For Finance Department Only:
Reviewed by: _____

Budget Amendment: _____

Date: _____

Return to Committee Cover Page

TENNESSEE
Hamblen County
SERVICE • COMMUNITY • INDUSTRY
OFFICE OF THE MAYOR

Hamblen County Commission

Month JUNE Year 2018

Fund #101 *DEPT:* GENERAL FUND - VARIOUS (#2)

Account Number	Description	Increase	Increase
	INCREASE REVENUE APPROPRIATIONS:		
	INDUSTRIAL DEVELOPMENT		
58120.364	Contracts for Development Costs	73,945	
	INCREASE REVENUE		
40115.000	Discount on Property Taxes		73,945
	To adjust for actual TIF payment		
	MISCELLANEOUS		
58900.510	Trustee's Commission	30,000	
	INCREASE REVENUE		
40110.000	Current Property Tax		30,000
	To increase budgeted amounts for Current Property Tax and Trustee's Commission to reflect actual collections following last year's tax increase		

Signature: Anna Bryant-Hurst
Title : Finance Director
Date: 6-8-2018

For Finance Department Only:
Reviewed by: _____
Budget Amendment: _____
Date: _____

Return to Committee Cover Page

TENNESSEE
Hamblen County
SERVICE • COMMUNITY • INDUSTRY
OFFICE OF THE MAYOR

Hamblen County Commission

Month MAY Year 2018

Fund #101 *DEPT:* **ARCHIVES**

Account Number	Description	Increase	Increase
	INCREASE APPROPRIATIONS:		
	ARCHIVES		
51910.435	Office Supplies	34.00	
	INCREASE REVENUE		
44130.000	Sale of Materials and Supplies		34.00

Brief Descriptions of issue:
To increase appropriations and revenue related to the sale of materials sold by Archives on behalf of Samuel D. Campbell and Hamblen County Genealogical Society

Signature: Cindy Lorne
Title : Archives Director
Date: June 1, 2018

For Finance Department Only:
Reviewed by: _____
Budget Amendment: _____
Date: _____

Return to Committee Cover Page

Hamblen County Commission
Finance Committee
Information Purposes Only

TENNESSEE
Hamblen County
SERVICE · COMMUNITY · INDUSTRY
OFFICE OF THE MAYOR

Report of Budget amendments approved by County Mayor during the month of May

Month MAY Year 2018

Fund #101 *DEPT:* CIVIL DEFENSE

Account Number	Description	Increase	Decrease
	APPROPRIATIONS:		
	CIVIL DEFENSE		
54410.425	Gasoline	350	
54410.599	Other Charges		350

Brief Descriptions of issue:

To reclassify appropriations to cover fuel expense for EMA through the remainder of FY17-18

Signature: Chris Bell

Title : Director

Date: 5-30-18

For Finance Department Only:
Reviewed by: _____

Budget Amendment _____

Return to Committee Cover Page

TENNESSEE
Hamblen County
SERVICE • COMMUNITY • INDUSTRY
OFFICE OF THE MAYOR

Hamblen County Commission

Month MAY Year 2018

Fund #101 *DEPT:* OTHER PUBLIC SAFETY

Account Number	Description	Increase	Increase
	INCREASE APPROPRIATIONS:		
	OTHER PUBLIC SAFETY		
54900.790	Other Equipment	800.00	
	INCREASE REVENUE		
44180.000	Expenditure Credits		800.00

Brief Descriptions of issue:
To increase appropriations and revenue related to rebate received from United Communication Corp. for purchase of Motoroal Pager

Signature: Chris Bell

Title : Director

Date: 5-18-18

For Finance Department Only:
Reviewed by: _____

Budget Amendment: _____

Date: _____

Return to Committee Cover Page

TENNESSEE
Hamblen County
SERVICE • COMMUNITY • INDUSTRY
OFFICE OF THE MAYOR

Hamblen County Commission

Month JUNE Year 2018

Fund 116 *DEPT:* SANITATION

Account Number	Description	Increase	Decrease
	APPROPRIATIONS:		
	SANITATION		
55710.105	Supervisor/Director	1,400	
55710.149	Laborers	25,300	
55710.144	Equipment Operators		15,000
55710.147	Truck Drivers		11,700

Brief Descriptions of issue:
To adjust payroll line items for reclassification of personnel

Signature: Barry G. Fox
Title : Hamblen County Road Supt.
Date: 06-06-18

For Finance Department Only:
Reviewed by: _____
Budget Amendment: _____
Date: _____

Return to Committee Cover Page

TENNESSEE
Hamblen County
SERVICE • COMMUNITY • INDUSTRY
OFFICE OF THE MAYOR

Hamblen County Commission

Month MAY Year 2018

Fund 116 *DEPT:* SANITATION

Account Number	Description	Increase	Decrease
	APPROPRIATIONS:		
	SANITATION		
55710.336	Maintenance and Repair Services	5,000	
55710.412	Diesel Fuel	17,000	
55710.425	Gasoline	700	
55710.451	Uniforms	1,000	
55710.312	Contracts with Private Agencies		23,700

Brief Descriptions of issue:
To reclassify appropriations to cover maintenance, diesel fuel, gasoline, and uniform expenses through the remainder of FY17-18.

Signature: Barry G. Poole
Title : Hamblen County Road Supt.
Date: 06-06-18

For Finance Department Only:
Reviewed by: _____
Budget Amendment: _____
Date: _____

Return to Committee Cover Page

TENNESSEE
Hamblen County
SERVICE • COMMUNITY • INDUSTRY
OFFICE OF THE MAYOR

Hamblen County Commission

Month JUNE Year 2018

Fund 116 *DEPT:* SANITATION

Account Number	Description	Increase	Decrease
	APPROPRIATIONS:		
	SANITATION		
55710.359	Disposal Fees	30,000	
55710.312	Contracts with Private Agencies		3,000
55710.399	Other Contracted Services		27,000

Brief Descriptions of issue:
To adjust disposal fees for needed amount to cover June payment

Signature: Ronny G. Pope
Title : Hamblen County Road Supt.
Date: 06-06-18

For Finance Department Only:
Reviewed by: _____
Budget Amendment: _____
Date: _____

Return to Committee Cover Page

TENNESSEE
Hamblen County
SERVICE • COMMUNITY • INDUSTRY
OFFICE OF THE MAYOR

Hamblen County Commission

Month MAY Year 2018

Fund #122 *DEPT:* DRUG ENFORCEMENT

Account Number	Description	Increase	Decrease
	INCREASE APPROPRIATIONS:		
	DRUG ENFORCEMENT		
54150.716	Law Enforcement Equipment	5,510	
	DECREASE FUND BALANCE:		
34525.000	Restricted for Public Safety (Fund Balance)		5,510

Brief Descriptions of issue:
To increase appropriations to cover the purchase of 11 tactical helmets for the HIDTA office.
The total cost of the 11 helmets is $7,105.00. There is currently $1,596 in the equipment line item. This budget amendment will use Drug Fund Balance to cover the remaining $5,510 needed to purchase the requested items.

Signature: Dolly Hammond
Title : Executive Assistant
Date: 5-22-18

For Finance Department Only:
Reviewed by: _____
Budget Amendment: _____
Date: _____

Return to Committee Cover Page

TENNESSEE
Hamblen County
SERVICE · COMMUNITY · INDUSTRY
OFFICE OF THE MAYOR

Hamblen County Commission

Month MAY Year 2018

Fund #131 *DEPT:* HIGHWAY DEPARTMENT

Account Number	Description	Increase	Decrease
	INCREASE APPROPRIATIONS:		
	HIGHWAY DEPARTMENT		
62000.404	Asphalt - Hot Mix	39,000	
	DECREASE FUND BALANCE:		
34550.000	Restricted For Highway/Public Works		39,000

Brief Descriptions of issue:
To increase appropriations to cover the cost of hot mix asphalt needed for necessary road repairs.

Signature: Barry G. Poole
Title : Hamblen County Road Supt.
Date: 06-06-18

For Finance Department Only:
Reviewed by: _____
Budget Amendment: _____
Date: _____

Return to Committee Cover Page

TENNESSEE
Hamblen County
SERVICE • COMMUNITY • INDUSTRY
OFFICE OF THE MAYOR

Hamblen County Commission

Month MAY Year 2018

Fund 131 *DEPT:* HIGHWAY DEPARTMENT

Account Number	Description	Increase	Decrease
	APPROPRIATIONS:		
	HIGHWAY DEPARTMENT		
62000.404	Asphalt - Hot Mix	20,912	
62000.444	Salt		17,000
62000.599	Other Charges		3,912

Brief Descriptions of issue:
To reclassify appropriations to cover the cost of asphalt needed for the remainder of FY17-18

Signature: Barry G. Poole
Title : Hamblen County Road Supt.
Date: 06-06-18

For Finance Department Only:
Reviewed by: _____
Budget Amendment: _____
Date: _____

Return to Committee Cover Page

TENNESSEE
Hamblen County
SERVICE • COMMUNITY • INDUSTRY
OFFICE OF THE MAYOR

Hamblen County Commission

Month JUNE Year 2018

Fund #131 *DEPT:* HIGHWAY DEPARTMENT

Account Number	Description	Increase	Increase
	INCREASE APPROPRIATIONS:		
	HIGHWAY DEPARTMENT		
61000.510	Trustee's Commission	6,300.00	
	INCREASE REVENUE		
46920.000	Gasoline and Motor Fuel Tax		6,300.00

Brief Descriptions of issue:
To increase budgeted amounts for Gasoline and Motor Fuel Tax and Trustee's Commission to reflect actual collections due to Improve Act.

Signature: Barry G. Poole
Title : Hamblen County Road Supt.
Date: 06-08-18

For Finance Department Only:
Reviewed by: _____
Budget Amendment: _____
Date: _____

Return to Committee Cover Page

TENNESSEE
Hamblen County
SERVICE • COMMUNITY • INDUSTRY
OFFICE OF THE MAYOR

Hamblen County Commission

Month JUNE Year 2018

Fund 131 *DEPT:* HIGHWAY DEPARTMENT

Account Number	Description	Increase	Decrease
	APPROPRIATIONS:		
	HIGHWAY DEPARTMENT		
63100.412	Diesel Fuel	3,000	
63100.425	Gasoline		3,000

Brief Descriptions of issue:
To increase budgeted amount for diesel fuel

Signature: Barry G. Pope
Title : Hamblen County Road Supt.
Date: 06-08-18

For Finance Department Only:
Reviewed by: _____
Budget Amendment: _____
Date: _____

Return to Committee Cover Page

TENNESSEE
Hamblen County
SERVICE • COMMUNITY • INDUSTRY
OFFICE OF THE MAYOR

Hamblen County Commission

Month JUNE Year 2018

Fund 131 *DEPT:* HIGHWAY DEPARTMENT

Account Number	Description	Increase	Decrease
	APPROPRIATIONS:		
	HIGHWAY DEPARTMENT		
63100.105	Supervisor / Director	590	
63100.142	Mechanic(s)	120	
63100.187	Overtime Pay		710

Brief Descriptions of issue:
To adjust accounts after employees were reclassified and to adjust for actual logevity pay

Signature: Barry G. Porter
Title : Hamblen County Road Supt.
Date: 06-08-18

For Finance Department Only:
Reviewed by: _____
Budget Amendment: _____
Date: _____

Return to Committee Cover Page

TENNESSEE
Hamblen County
SERVICE • COMMUNITY • INDUSTRY
OFFICE OF THE MAYOR

Hamblen County Commission

Month JUNE Year 2018

Fund #151 *DEPT:* GENERAL DEBT SERVICE FUND

Account Number	Description	Increase	Decrease
	INCREASE APPROPRIATIONS:		
	GENERAL DEBT SERVICE FUND		
82210.613	Interest on Other Loans - General Government	10,410	
82230.613	Interest on Other Loans - Education	31,630	
82310.510	Trustee's Commission	13,000	
82330.699	Other Debt Service	1,500	
	DECREASE FUND BALANCE:		
39000.000	Unassigned Fund Balance		56,540

Brief Descriptions of issue:
To amend accounts that would be over original budgeted amounts. Trustee's Commission shortage is due to 3 extra pennies budgeted to account. Renewal of E-4-A required extra fees recorded as interest.

Signature: Bill Bunch
Title : County Mayor
Date: 6-7-18

For Finance Department Only:
Reviewed by: _____
Budget Amendment: _____
Date: _____

Return to Committee Cover Page

HAMBLEN COUNTY DEPARTMENT OF EDUCATION

210 East Morris Boulevard
Morristown, Tennessee 37813
Phone (423) 586-7700 • Fax (423) 586-7747

The mission of Hamblen County Schools is to educate students so they can be challenged to successfully compete in their chosen fields.

BOARD OF EDUCATION

Shahin Assadnia

Carolyn Clawson

Joe Gibson, Jr.

Roger Greene

James Grigsby

Janice Haun

Clyde Kinder

AMENDMENT #4
2017-2018

The Hamblen County Board of Education requests approval from the Hamblen County Commission for Amendment #4 to the 2017-2018 General Purpose Budget. This amendment was approved by the Board of Education on May 8, 2018.

On July 10, 2017, the Hamblen County Commission approved a General Purpose Budget in the amount of $85,109,434.95. Amendment #1 increased the budget to $85,373,894.14. Amendment #2 increased the budget to $85,565,655.02. Amendment #3 increased the budget to $85,618,570.38. Amendment #4 will increase the budget to $85,644,170.38.

This amendment does not affect the County's maintenance of effort.

Jeff Perry, Superintendent of Schools

HAMBLEN COUNTY DEPARTMENT OF EDUCATION
2017-2018
Jeff Perry, Director of Schools

GENERAL PURPOSE
AMENDMENT #4

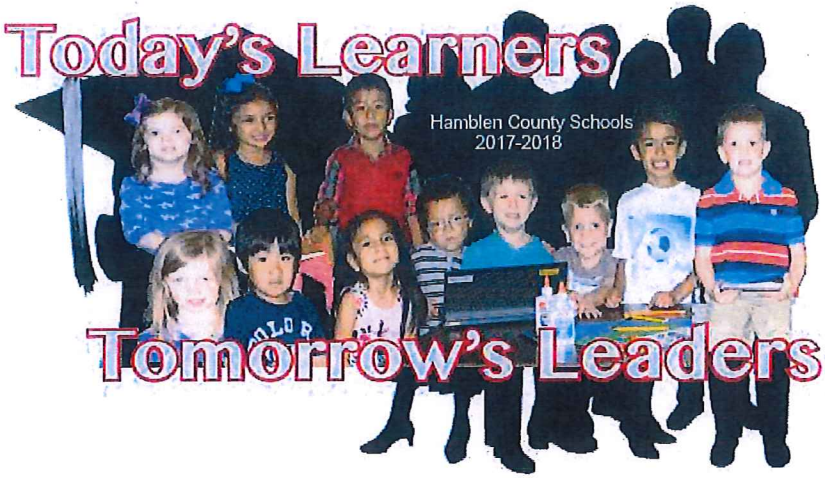

HAMBLEN COUNTY SCHOOLS
GENERAL PURPOSE SCHOOL BUDGET
2017-2018
AMENDMENT #4 - EXTERNAL

EXPENDITURE CODE	TITLE	BUDGET	INCREASE	DECREASE	ACTUAL	PURPOSE
71100-429	INSTRUCTIONAL SUPPLIES AND MATERIALS	$ 411,971.50	$ 4,878.98		$ 416,850.48	MOVING FUNDS IN READ TO BE READY GRANT TO PURCHASE BOOKS AND SUPPLIES
72210-399	OTHER CONTRACTED SERVICES	$ 80,000.00	$ 21,700.00	$ -	$ 101,700.00	WORK-BASED LEARNING GRANT FOR STUDENT INTERNSHIP OPPORTUNITIES
72210-499	OTHER SUPPLIES AND MATERIALS	$ 41,319.00	$ 3,300.00	$ -	$ 44,619.00	WORK-BASED LEARNING GRANT FOR STUDENT INTERNSHIP OPPORTUNITIES
72210-189	OTHER SALARIES AND WAGES	$ 219,603.00	$ -	$ 3,842.50	$ 215,760.50	MOVING FUNDS IN READ TO BE READY GRANT TO PURCHASE BOOKS AND SUPPLIES
72210-201	SOCIAL SECURITY	$ 30,658.00	$ -	$ 238.20	$ 30,419.80	MOVING FUNDS IN READ TO BE READY GRANT TO PURCHASE BOOKS AND SUPPLIES
72210-204	STATE RETIREMENT	$ 29,253.50	$ -	$ 227.25	$ 29,026.25	MOVING FUNDS IN READ TO BE READY GRANT TO PURCHASE BOOKS AND SUPPLIES
72210-212	EMPLOYER MEDICARE	$ 7,171.00	$ -	$ 55.63	$ 7,115.37	MOVING FUNDS IN READ TO BE READY GRANT TO PURCHASE BOOKS AND SUPPLIES
72210-524	STAFF DEVELOPMENT	$ 93,034.90	$ 84.60		$ 93,119.50	MOVING FUNDS IN READ TO BE READY GRANT TO PURCHASE BOOKS AND SUPPLIES
	TOTALS	**$ 913,010.90**	**$ 29,963.58**	**$ 4,363.58**	**$ 938,610.90**	
	NET INCREASE		**$ 25,600.00**			

HAMBLEN COUNTY SCHOOLS
GENERAL PURPOSE SCHOOL BUDGET
2017-2018
AMENDMENT #4 - EXTERNAL

REVENUE CODE	TITLE	BUDGET	INCREASE	DECREASE	ACTUAL	PURPOSE
46590	OTHER STATE EDUCATION FUNDS	$ 10,000.00	$ 600.00	$ -	$ 10,600.00	RECEIVED AN ADDITIONAL ALLOCATION FOR READ TO BE READY GRANT
46580	OTHER STATE GRANTS	$ 393,983.30	$ 25,000.00	$ -	$ 418,983.30	WORK-BASED LEARNING GRANT FOR STUDENT INTERNSHIP OPPORTUNITIES
	TOTALS	**$ 403,983.30**	**$ 25,600.00**	**$ -**	**$ 429,583.30**	
	NET INCREASE		**$ 25,600.00**			

HAMBLEN COUNTY DEPARTMENT OF EDUCATION
2017-2018
Dr. Jeff Perry, Director of Schools

GENERAL PURPOSE
AMENDMENT #5

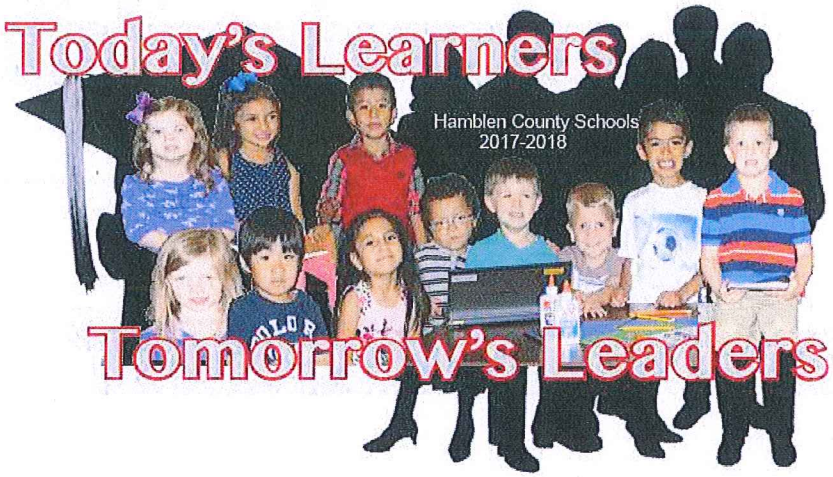

HAMBLEN COUNTY SCHOOLS
GENERAL PURPOSE SCHOOL BUDGET
2017-2018
AMENDMENT #5 - EXTERNAL

EXPENDITURE CODE	TITLE	BUDGET	INCREASE	DECREASE	ACTUAL	PURPOSE
73400-429	INSTRUCTIONAL SUPPLIES AND MATERIALS	$ 7,650.00	$ 25,060.00	$ -	$ 32,710.00	STATE FUNDING FOR PRE-K CURRICULUM
	TOTALS	$ 7,650.00	$ 25,060.00	$ -	$ 32,710.00	
	NET INCREASE		$ 25,060.00			

HAMBLEN COUNTY SCHOOLS
GENERAL PURPOSE SCHOOL BUDGET
2017-2018
AMENDMENT #5 - EXTERNAL

REVENUE CODE	TITLE	BUDGET	INCREASE	DECREASE	ACTUAL	PURPOSE
46515	EARLY CHILDHOOD EDUCATION	$ 634,815.00	$ 25,060.00	$ -	$ 659,875.00	STATE FUNDING FOR PRE-K CURRICULUM
	TOTALS	$ 634,815.00	$ 25,060.00	$ -	$ 659,875.00	
	NET INCREASE		$ 25,060.00			

May	2018													
Permit	Date	Applicant	Type	Address	Construction	Permit	SW	Plumbing	Mech.	Gas	Total	Tax Map	Group	Parcel
14-1074	5/1/18	Walker	carport/mower shed	5626 E Sugar Hollow Rd	$1,100.00	$25.00					$25.00	026		120.01
14-1075	5/1/18	Allison	deck/cover	4516 Old Kentucky Rd	$2,500.00	$100.00					$100.00	018		103.00
14-1076	5/1/18	Osborne	access bldg	1708 Pembrook Dr		$73.00					$73.00	035O	A	028.00
14-1077	5/2/18	Estevez	garage det 10x20	1058 Shadow Wood Lane	$6,000.00	$50.00					$50.00	040H	A	076.00
14-1078	5/4/18	Perry	**House 2900 sq ft**	1730 Silver City Rd	**$120,000.00**	$1,595.00	$100.00	$80.00			**$1,790.00**	028		007.02
14-1079	5/3/18	Trent	pole barn 40x84	1101 Slop Creek Rd	$18,000.00	$0.00					$0.00	035		044.01
14-1080	5/4/18	Webber	access bldg 8x12	5877 Bernie Cr	$1,300.00	$0.00					$0.00	054		044.03
14-1081	5/4/18	D Young	garage 19x21/carport	4043 Terri Street		$256.00					$256.00	040K	C	005.00
14-1082	5/4/18	Price	garage 24x36	5144 Copper Ridge Rd	$9,619.00	$216.00					$216.00	011		001.04
14-1083	5/7/18	Wilder	**House 1600 sq ft**	3777 Dan Drive	**$185,000.00**	$880.00	$100.00	$75.00	$20.00		**$1,075.00**	017D	C	020.00
14-1084	5/9/18	Heck	deck/cover	366 Greenbriar Rd	$5,000.00	$108.00					$108.00	054B	C	002.00
14-1085	5/16/18	Frizzell Con	pumphouse/station	5562 Wallace Farm Rd	$750,000.00	$408.20					$408.20	062		010.22
14-1086	5/11/18	Gerth	deck at pool	914 Rouse Rd	$6,000.00	$25.00					$25.00	057		096.11
14-1087	5/11/18	R Wilder	garage 32x48 det	1970 Jaybird Rd	$25,000.00	$384.00					$384.00	018		017.04
14-1088	5/14/18	Knox	deck 14x36	3175 Naomi Drive	$12,000.00	$25.00					$25.00	032J	F	032.00
14-1089	5/14/18	Turner	screened porch	1108 Hickory View Drive	$30,000.00	$139.50					$139.50	040H	A	098.00
14-1090	5/15/18	Podschweit	reoair floor trusses	1012 E Brentwood Drive	$16,000.00	$90.00					$90.00	040I	C	021.00
14-1091	5/7/18	Flamm	access bldg 12x24	232 Statem Gap Road	$5,538.70	$72.00					$72.00	050		018.06
14-1092	5/17/18	Turner	access bldg 20x10	1108 Hickory View Drive	$0.00	$50.00					$50.00	040H	A	098.00
14-1093	5/17/18	Thornburg	barn 20x24	861 Cain Mill Rd	$2,000.00	$120.00					$120.00	019		002.00
14-1094	5/18/18	Lawson	pool/deck	1161 Murrell Rd	$6,500.00	$75.00					$75.00	040H	B	002.00
14-1095	5/18/18	Haggard	porch cover	1180 Warrensburg Rd	$400.00	$48.00					$48.00	027		010.02
14-1096	5/1818	Mercy Bapt	carport 12x21	3190 Valley Home Rd		$25.00					$25.00	056		016.04
14-1097	5/21/18	Roach	pool/deck	1078 Beth Drive	$3,923.55	$75.00					$75.00	027J	A	032.00
14-1098	5/21/18	Diamond	deck 180 sq ft	6208 Golden Drive	$4,000.00	$25.00					$25.00	047C	A	002.00
14-1099	5/21/18	Childress	carport	3483 Norton Drive		$50.00					$50.00	017K	C	047.00
14-1100	5/22/18	Morgan	carport	2607 Robin Circle	$400.00	$25.00					$25.00	043.I	C	014.00
14-1101	5/23/18	Wilson	**House 2000 sq ft**	4841 Spencer Hale Rd	**$280,000.00**	$1,220.00	$100.00	$120.00	$20.00	$25.00	$1,485.00	057		095.08
14-1102	5/22/18	Verizon	dish/equip added	5037 Buell Chapel Rd	$8,000.00	$50.00					$50.00	058		058.00
14-1103	5/25/18	Shelton	DWMH/2-decks	6149 Sky High Court	$98,000.00	$375.00					$375.00	027K	A	008.00
14-1104	5/25/18	Greene	access bldg 10x20	760 Harvey Dr	$3,200.00	$50.00					$50.00	018K	A	010.00
14-1105	5/25/18	Clark	garage 30x60	3707 Old Kentucky Rd	$35,000.00	$450.00		$40.00			$490.00	017		126.00
14-1106	5/29/18	Brady	deck 22x16 attached	4525 Holly Tree Lane	$5,500.00	$25.00					$25.00	040H	B	026.00
14-1107	5/30/18	Storey	access bldg 10x16	1276 Crest Way Dr	$3,320.00	$40.00					$40.00	040A	B	001.00
14-1108	5/31/18	Sanchez	carport det 12x12	1803 Dalton Ford Rd		$25.00					$25.00	025C	B	100.03
14-1109	5/31/18	Lawson	DWMH/2-decks	2830 Robinson Creek	$119,000.00	$375.00					$375.00	043		pt039.02
	Total	36		Total	$1,762,301.25	$7,549.70	$300.00	$315.00	$40.00	$25.00	$8,244.70			
Running	Total	279			$13,904,968.25	$72,680.65	$2,800.00	$2,675.00	$305.00	$95.00	$89,510.60			

												ETHRA	Monthly	YTD
					Total No.	Amount		Total				HOMES	0	0
				Copies and Miscellaneous		$7.00		$0.00	May					
				Re-Zoning Request		$75.00		$0.00	Grand					
				Variance Request / Site Plan		$50.00		$100.00	Total:		$9,094.70			
				Plat Approval		$150.00		$750.00						
		3 lots or	more	Land Disturbance/Development		$100.00		$0.00	2017-2018					
				Use on Review		$50.00		$0.00	Running					
				Refunds				$0.00						
				Total Collected				$850.00	Total:		$96,466.10			
				Running Total Collected				$8,904.50						

Return to Committee Cover Page

LAW OFFICES
CAPPS, CANTWELL, CAPPS & BYRD
P.O. Box 1897
1004 WEST FIRST NORTH STREET
MORRISTOWN, TENNESSEE 37816-1897

PAUL R. CAPPS (1922-2003)

CHRISTOPHER P. CAPPS
DAVID S. BYRD

ELIANA LEAL, ASSOCIATE

TELEPHONE: (423) 586-3083
FACSIMILE: (423) 586-0513
WEBSITE: cappsbyrdlaw.com
E-MAIL: info@cccblaw.com

May 31, 2018

Mr. Bill Brittain, County Mayor
Hamblen County Courthouse
511 West Second North Street
Morristown, TN 37814

RE: INVOICES FOR LEGAL SERVICES RENDERED ON BEHALF OF HAMBLEN COUNTY, TENNESSEE - MAY, 2018

Dear Bill:

Please find enclosed three (3) invoices representing legal services rendered on behalf of Hamblen County, Tennessee during the month of May, 2018.

As usual, one invoice covers our General/Miscellaneous File and two (2) invoices cover separate county departments.

Please review these invoices, and if you have any questions, please do not hesitate to contact me.

With best regards, I remain,

Very truly yours,

Christopher P. Capps/alg

Christopher P. Capps

CPC/alg

Enclosures

C:\USERS\AMY GREER\DOCUMENTS\PUBLIC FOLDERS\DOCUMENTS\HAMBLEN COUNTY\LETTERS\2018\BRITTAIN,BILL(INVOICE)-05-31-18.DOCX

Law Office of Capps, Cantwell, Capps, & Byrd

P.O. Box 1897
Morristown, TN 37816-1897

INVOICE

Invoice # 336
Date: 06/05/2018
Due On: 07/05/2018

Hamblen County Government
Hamblen County Courthouse
511 West Second North Street
Morristown, TN 37814

00027-Hamblen County Government

General Account

Type	Date	Description	Quantity	Rate	Total
Service	05/02/2018	Phone conference with and e-mail from Debra Robinson re: subro claim	0.20	$150.00	$30.00
Service	05/03/2018	E-mail from Jennifer Schmidt re: pending litigation; e-mail from Melanie Brumley re: pending litigation	0.10	$150.00	$15.00
Service	05/04/2018	Review playground contract; e-mails from and to Johnna Harrell; review e-mail from Travelers re: pending litigation, e-mails to and from Jeff Thompson; e-mails to and from Jeff Thompson re: pending litigation	0.70	$150.00	$105.00
Service	05/07/2018	Phone conference with Bill Brittain	0.25	$150.00	$37.50
Service	05/08/2018	Review Thompson and Litton contract, e-mails to and from Bill Brittain	0.50	$150.00	$75.00
Service	05/09/2018	E-mails from and to Bill Brittain re: contract	0.05	$150.00	$7.50
Service	05/11/2018	E-mails from and to Cindy Dibb re: committee meeting	0.10	$150.00	$15.00
Service	05/14/2018	Committee meeting	0.50	$150.00	$75.00
Service	05/15/2018	Phone conference with Bill Brittain	0.05	$150.00	$7.50
Service	05/18/2018	E-mail from Cindy Dibb re: 5/24 commission meeting; phone conference with Bill Brittain	0.15	$150.00	$22.50
Service	05/21/2018	Phone conference with Bill Brittain	0.10	$150.00	$15.00
Service	05/22/2018	E-mail from Tom Jessee re: opioid case; phone conference with Bill Brittain	0.10	$150.00	$15.00

Service	05/23/2018	E-mail from Judge Snider re: garnishments; e-mail from Jennifer Schmidt re: pending litigation; e-mail from Cindy Dibb re: 5/24 commission meeting	0.10	$150.00	$15.00
Service	05/24/2018	Commission meeting	0.60	$150.00	$90.00
Service	05/25/2018	E-mails to and from Kelley Hinsley re: Johnson property	0.05	$150.00	$7.50
Service	05/29/2018	E-mail from Tom Jessee re: opioid case	0.05	$150.00	$7.50
Service	05/30/2018	E-mail to Tom Jessee re: opioid case; phone call with Bill Brittain; phone conference with Bill Brittain and Trisha re: opioid case	0.65	$150.00	$97.50
				Total	**$637.50**

Detailed Statement of Account

Current Invoice

Invoice Number	Due On	Amount Due	Payments Received	Balance Due
336	07/05/2018	$637.50	$0.00	$637.50
			Outstanding Balance	**$637.50**
			Amount in Trust	**$0.00**
			Total Amount Outstanding	**$637.50**

Please make all amounts payable to: Law Office of Capps, Cantwell, Capps, & Byrd

Please pay within 30 days.

Law Office of Capps, Cantwell, Capps, & Byrd

P.O. Box 1897
Morristown, TN 37816-1897

INVOICE

Invoice # 335
Date: 06/04/2018
Due On: 07/04/2018

Hamblen County Government
Hamblen County Courthouse
511 West Second North Street
Morristown, TN 37814

00068-Hamblen County Planning Department

Planning

Type	Date	Description	Quantity	Rate	Total
Service	05/03/2018	Phone conferences with Bill Brittain and Judge Snider; meeting with Judge Snider	0.70	$150.00	$105.00
Service	05/16/2018	Meeting with Tina	0.50	$150.00	$75.00
Service	05/17/2018	E-mail from Tina Whitaker re: violations	0.10	$150.00	$15.00
Service	05/21/2018	E-mails from and to Tina Whitaker re: citations	0.15	$150.00	$22.50
Service	05/24/2018	E-mails with Tina; call to Davis	0.50	$150.00	$75.00
Service	05/25/2018	Travel to and from Rendezvous; meeting at Rendezvous	1.00	$150.00	$150.00
Service	05/30/2018	E-mails from and to Tina Whitaker re: complaint forms	0.05	$150.00	$7.50
				Total	**$450.00**

Detailed Statement of Account

Current Invoice

Invoice Number	Due On	Amount Due	Payments Received	Balance Due
335	07/04/2018	$450.00	$0.00	$450.00

Outstanding Balance	**$450.00**
Amount in Trust	**$0.00**
Total Amount Outstanding	**$450.00**

Please make all amounts payable to: Law Office of Capps, Cantwell, Capps, & Byrd

Please pay within 30 days.

Law Office of Capps, Cantwell, Capps, & Byrd

P.O. Box 1897
Morristown, TN 37816-1897

INVOICE

Invoice # 334
Date: 06/04/2018
Due On: 07/04/2018

Hamblen County Sheriff's Department
511 West Second North Street
Morristown, TN 37814

00043-Hamblen County Sheriff's Department

Sheriff's Department

Type	Date	Description	Quantity	Rate	Total
Service	05/14/2018	E-mails from and to Debbie Hammond re: unmanned aerial devices; research and review drone policy	2.00	$150.00	$300.00
Service	05/15/2018	Phone conference with Debbie Hammond re: drone policy	0.10	$150.00	$15.00
Service	05/21/2018	E-mails from and to Debbie Hammond re: Yahoo invoice	0.15	$150.00	$22.50
Service	05/23/2018	Meeting with Mize; conference with Perales	0.30	$150.00	$45.00
				Total	**$382.50**

Detailed Statement of Account

Current Invoice

Invoice Number	Due On	Amount Due	Payments Received	Balance Due
334	07/04/2018	$382.50	$0.00	$382.50
			Outstanding Balance	**$382.50**
			Amount in Trust	**$0.00**
			Total Amount Outstanding	**$382.50**

Please make all amounts payable to: Law Office of Capps, Cantwell, Capps, & Byrd

Please pay within 30 days.

MONTHLY REPORT
Hamblen County Coroner
P.O. Box 1479
Morristown, Tennessee 37816-1479
Phones (423)Home 581-6229 Fax 289-1262 Cell 301-6322

June 1, 2018

RECEIVED
JUN - 1 2018
OFFICE OF HAMBLEN COUNTY MAYOR

Hamblen County Commission
C/O Mr. Bill Brittain, County Mayor
Hamblen County Court House
Morristown, Tennessee 37814

Dear Commissioners:
The following Coroner calls were investigated by me during the month of May along with being on call 24/7/365, recording/maintaining statistics, prepare reports, training, assisting, directing and reviewing each call, and the work of all Deputy Coroners and, serving as liaison between Medical Examiner and Pathologist; collecting, preparing and shipping toxicology specimens and reviewing/approving all cremation requests.

CALL#	CASE#	DATE	NAME, AGE, HOME ADDRESS *1
1.	18178	05-01-18	Mr. Gary Brooks, 60, 2334 Shields Ferry Road
2.	18179	05-02-18	Mr. Michael Fisher, 71, 3223 Enka Highway
3.	18180	05-04-18	Mr. Johnny White, 61, 2670 Shields Ferry Road
4.	18182	05-05-18	Ms. Clara Yount, 82, 621 South Cumberland Street
5.	18183	05-06-18	Mrs. Minnie Love, 85, 1621 Claire Lane
6.	18185	05-07-18	Mrs. Helen Spoone, 85, 413 Milburn Street
7.	18190	05-08-18	Mr. Billy Baker, 76, 1751 Shinbone Road
8.	*18191	05-10-18	Mr. Kenneth Carter, 46, 3007 Valley Home Road
9.	18193	05-11-18	Mr. Claude Price, 82, 2385 Dover Road
10.	18199	05-15-18	Mr. Thomas Blackburn, 67, 329 Cleveland Avenue
11.	18201	05-16-18	Miss. Jennifer Howard, 43, 2039 Jennifer Drive
12.	18202	05-17-18	Mrs. Nellie Shropshire, 834 Lincoln Avenue
13.	18205	05-20-18	Mr. Henry Seal, 59, 617 Gammon Avenue
14.	18206	05-20-18	Mr. Mack Susong, 78, 254 Melborne Street
15.	18207	05-22-18	Mr. William Grisham, 74, 1006 North Fairmont Street
16.	18208	05-22-18	Mr. Charles Taylor, 75, 715 Shockley Avenue
17.	18211	05-24-18	Mrs. Gyen Coffey, 91, 2328 Quillen Drive
18.	18212	05-26-18	Mrs. Madge Susong, 78, 484 Kensington Drive
19.	18214	05-28-18	Mr. Donald Choate, 65, 437 Cain Avenue
20.	18217	05-29-18	Mr. John Miller, 80, 305 South Park Avenue
21.	18218	05-31-18	Mrs. Iva Lamb, 82, 1620 Valley Home Road

If I may ever provide any additional information or assistance, please feel free to contact me at any time on my cell phone 423-312-6322.

Eddie R. Davis
Hamblen County Coroner
CC: Hamblen County Medical Examiner
* Indicates Autopsy Performed
*1 All home addresses are Hamblen County unless otherwise stated.
& Toxicology Samples Collected by Coroner's Office and sent to: AXIS Forensic Toxicology (Formerly AIT Laboratories), Indianapolis, IN

MONTHLY REPORT

Hamblen County Deputy Coroner
7763 Melanie Circle
Talbott, Tennessee 37877
Phone: 423-586-6310

June 1, 2018

Hamblen County Commission
C/O Mr. Bill Brittain, County Mayor
Hamblen County Court House
Morristown, Tennessee 37814

Dear Commissioners:

The following Coroner calls were answered by me during the month of May.

CALL#	CASE#	DATE	NAME, AGE, HOME ADDRESS *1
1.	18194	05-11-18	Mrs. Lenoir Musser, 96, 6525 Panther Creek Road
2.	18200	05-15-18	Mr. Spencer Smith, 58, 3424 Old Kentucky Road
3.	18203	05-17-18	Mr. Euless Hall, 85, 726 Highland Drive
4.	18204	05-19-18	Mr. Randy Hester, 50, 115 East Third North Street
5.	18209	05-23-18	Mr. John Gamble, 70, 4900 Hundred Oak Drive

I certify that I attended to the cases listed above. I request the allocated fees of $40.00 per call:

5 Calls X $40. = $200.00

Sincerely,

SIGNATURE ON FILE

Jimmy Peoples
Deputy Coroner

erd/jp

CC: Hamblen County Medical Examiner
* Indicates Autopsy Preformed
*1 All home addresses are Hamblen County unless otherwise stated.
& Toxicology Samples Sent to AXIS Forensic Toxicology (Formerly AIT Laboratories), Indianapolis, IN

MONTHLY REPORT

Hamblen County Deputy Coroner
1925 Deer Ridge Drive
Morristown, Tennessee 37813
Phone: 423-586-2524

June 1, 2018

Hamblen County Commission
C/O Mr. Bill Brittain, County Mayor
Hamblen County Court House
Morristown, Tennessee 37814

Dear Commissioners:

The following Coroner calls were answered by me during the month of May.

CALL#	CASE#	DATE	NAME, AGE, HOME ADDRESS *1
1.	*18184	05-07-18	Miss. Kimberly Campbell, 41, Mohawk, TN
2.	18186	05-07-18	Mr. William Knipp, 53, 7433 Stage Coach Road
3.	18192	05-11-18	Mr. Walter Mead, 77, 1220 Mill Race Drive
4.	18195	05-13-18	Mr. Dennis Long, 63, White Pine, TN
5.	18196	05-13-18	Mrs. Freida Linkous, 74, 511 Parker Road
6.	18197	05-13-18	Mrs. Geraldine Smith, 80, 2796 Cherokee Drive

I certify that I attended to the cases listed above. I request the allocated fees of $40.00 per call:

6 Calls X $40. = $240.00

Sincerely,

SIGNATURE ON FILE

Todd Giles
Deputy Coroner

erd/tg

CC: Hamblen County Medical Examiner
* Indicates Autopsy Preformed
*1 All home addresses are Hamblen County unless otherwise stated.
& Toxicology Samples Sent to AXIS Forensic Toxicology (Formerly AIT Laboratories), Indianapolis, IN

MONTHLY REPORT

Hamblen County Deputy Coroner
Post Office Box 577
Russellville, Tennessee 37860-0577
Phone: 423-585-7117

June 1, 2018

Hamblen County Commission
C/O Mr. Bill Brittain, County Mayor
Hamblen County Court House
Morristown, Tennessee 37814

Dear Commissioners:

The following Coroner calls were answered by me during the month of May.

CALL#	CASE#	DATE	NAME, AGE, HOME ADDRESS *1
1.	**18177	04-29-18	Mrs. Joyce Hopkins, 81, Talbott, TN
2.	18181	05-05-18	Mrs. Neolene Hall, 76, Dandridge, TN
3.	18187	05-08-18	Mr. David Brown, 53, 4395 Danbury Drive
4.	*18188	05-08-18	Mr. David Finney, 37, 1008 Shadowwood Lane
5.	18189	05-08-18	Mr. Ernest Wilson, 100, 325 East Morris Blvd.
6.	18198	05-14-18	Mr. Clyde Williams, 2137 Silver City Road
7.	18210	05-24-18	Ms. Lisa Stout, 38, Talbott, TN
8.	18213	05-26-18	Mr. Jack Piper, 90, 831 Old Witt Road
9.	*18215	05-28-18	Mr. Tracy Bastian, 48, 1006 West Skyline Drive
10.	18216	05-29-18	Mr. Tommy Fox, 71, 3320 Landmark Drive

I certify that I attended to the cases listed above. I request the allocated fees of $40.00 per call:

10 Calls X $40. = $400.00

Sincerely,

SIGNATURE ON FILE
J.R. Thompson, Jr.
Deputy Coroner

erd/jrt

CC: Hamblen County Medical Examiner
* Indicates Autopsy Preformed
*1 All home addresses are Hamblen County unless otherwise stated.
& Toxicology Samples Gathered and Sent to AXIS Forensic Toxicology (Formerly AIT Laboratories), Indianapolis, IN
** Omitted from previous Monthly Report

HAMBLEN COUNTY DEPARTMENT OF EDUCATION
QUARTERLY EXPENDITURE REPORT
Dr. Jeff Perry, Director

THIRD QUARTER
2017-2018

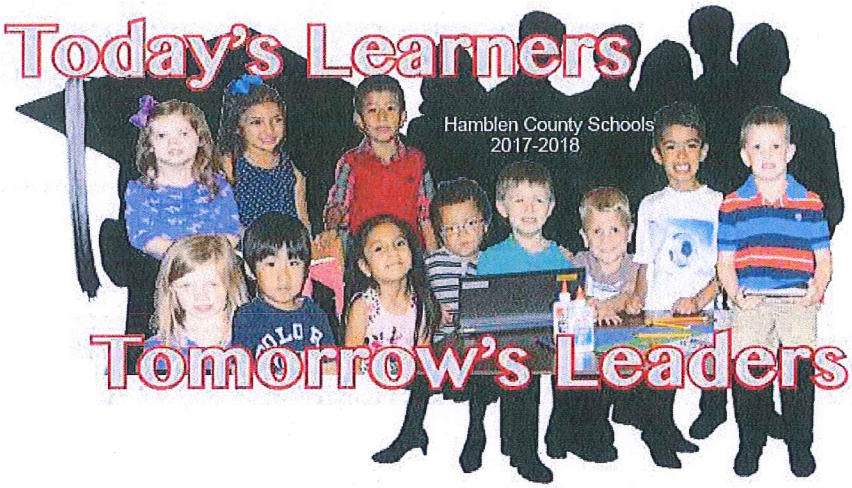

THE COUNTY BOARD OF EDUCATION REPORTS THE FOLLOWING EXPENDITURES
FOR THE PUBLIC SCHOOL PURPOSE AS OF THE QUARTER ENDING MARCH 31, 2018

GENERAL PURPOSE	BUDGET	SPENT	REMAINING	PERCENT REMAINING
REGULAR INSTRUCTION	$ 44,457,222.65	$ 29,559,777.28	$ 14,897,445.37	33.51%
SPECIAL EDUCATION	5,873,176.00	3,792,148.73	2,081,027.27	35.43%
VOCATIONAL EDUCATION	3,660,874.19	2,355,988.24	1,304,885.95	35.64%
STUDENT BODY	209,302.00	140,237.06	69,064.94	33.00%
ATTENDANCE	5,850.00	1,419.46	4,430.54	75.74%
HEALTH SERVICES	792,162.99	517,841.14	274,321.85	34.63%
OTHER STUDENT SUPPORT	1,600,927.00	1,042,433.90	558,493.10	34.89%
INSTRUCTIONAL ADMINISTRATION	992,959.40	580,940.76	412,018.64	41.49%
SPECIAL EDUCATION ADMINISTRATION	1,262,014.88	920,386.14	341,628.74	27.07%
VOCATIONAL EDUCATION ADMINISTRATION	225,878.00	166,976.42	58,901.58	26.08%
TECHNOLOGY	1,703,700.61	1,317,668.61	386,032.00	22.66%
BOARD OF EDUCATION	1,218,433.00	1,010,307.23	208,125.77	17.08%
OFFICE OF THE DIRECTOR	658,160.00	397,299.57	260,860.43	39.63%
OFFICE OF THE PRINCIPAL	4,849,140.00	3,313,657.03	1,535,482.97	31.67%
FISCAL SERVICES	561,974.00	342,915.45	219,058.55	38.98%
OPERATION OF PLANT	6,501,051.00	4,391,473.30	2,109,577.70	32.45%
MAINTENANCE OF PLANT	1,600,898.00	1,223,305.60	377,592.40	23.59%
TRANSPORTATION	3,729,265.00	2,504,197.43	1,225,067.57	32.85%
EXTENDED SCHOOL PROGRAM	320,206.00	177,461.81	142,744.19	44.58%
EARLY CHILDHOOD EDUCATION	881,509.00	582,981.60	298,527.40	33.87%
REGULAR CAPITAL OUTLAY	3,926,399.36	1,019,159.07	2,907,240.29	74.04%
EDUCATION DEBT SERVICE	500,000.00	500,000.00	-	0.00%
TRANSFERS	87,467.30	59,223.30	28,244.00	32.29%
TOTALS	$ 85,618,570.38	$ 55,917,799.13	$ 29,700,771.25	34.69%

Return to Committee Cover Page

THE COUNTY BOARD OF EDUCATION REPORTS THE FOLLOWING EXPENDITURES
FOR THE PUBLIC SCHOOL PURPOSE AS OF THE QUARTER ENDING MARCH 31, 2018

FEDERAL PROGRAMS - CONSOLIDATED ADMIN.	BUDGET	SPENT	REMAINING	PERCENT REMAINING
REGULAR INSTRUCTION	$ 179,314.49	$ 127,792.12	$ 51,522.37	28.73%
TOTALS	$ 179,314.49	$ 127,792.12	$ 51,522.37	28.73%

FEDERAL PROGRAMS - TITLE I	BUDGET	SPENT	REMAINING	PERCENT REMAINING
REGULAR INSTRUCTION	$ 2,247,429.51	$ 1,476,178.38	$ 771,251.13	34.32%
OTHER STUDENT SUPPORT	156,002.44	21,611.95	134,390.49	86.15%
REGULAR INSTRUCTION	532,155.27	183,692.82	348,462.45	65.48%
TRANSPORTATION	10,000.00	-	10,000.00	100.00%
TRANSFERS	55,880.00	-	55,880.00	0.00%
TOTALS	$ 3,001,467.22	$ 1,681,483.15	$ 1,319,984.07	43.98%

FEDERAL PROGRAMS - TITLE IIA	BUDGET	SPENT	REMAINING	PERCENT REMAINING
REGULAR INSTRUCTION	$ 71,910.00	$ 46,754.89	$ 25,155.11	34.98%
REGULAR INSTRUCTION	388,196.40	95,330.33	292,866.07	75.44%
TRANSFERS	9,477.40	-	9,477.40	100.00%
TOTALS	$ 469,583.80	$ 142,085.22	$ 327,498.58	69.74%

FEDERAL PROGRAMS - TITLE III	BUDGET	SPENT	REMAINING	PERCENT REMAINING
REGULAR INSTRUCTION	$ 149,150.00	$ 91,064.99	$ 58,085.01	38.94%
OTHER STUDENT SUPPORT	20,949.00	10,804.21	10,144.79	48.43%
REGULAR INSTRUCTION	-	-	-	0.00%
TRANSFERS	3,396.33	-	3,396.33	0.00%
TOTALS	$ 173,495.33	$ 101,869.20	$ 71,626.13	41.28%

FEDERAL PROGRAMS - IMMIGRANT GRANT	BUDGET	SPENT	REMAINING	PERCENT REMAINING
REGULAR INSTRUCTION	3,624.00	-	3,624.00	100.00%
TOTALS	$ 3,624.00	$ -	$ 3,624.00	100.00%

THE COUNTY BOARD OF EDUCATION REPORTS THE FOLLOWING EXPENDITURES

FOR THE PUBLIC SCHOOL PURPOSE AS OF THE QUARTER ENDING MARCH 31, 2018

FEDERAL PROGRAMS - TITLE X HOMELESS ED.	BUDGET	SPENT	REMAINING	PERCENT REMAINING
REGULAR INSTRUCTION	$ 50,260.00	$ 32,119.96	18,140.04	36.09%
REGULAR INSTRUCTION	1,819.70	1,819.70	-	0.00%
TRANSPORTATION	5,265.87	-	5,265.87	100.00%
TOTALS	$ 57,345.57	$ 33,939.66	$ 23,405.91	40.82%

FEDERAL PROGRAMS - READ TO BE READY GRANT	BUDGET	SPENT	REMAINING	PERCENT REMAINING
REGULAR INSTRUCTION	9,058.92	-	9,058.92	100.00%
TOTALS	$ 9,058.92	$ -	$ 9,058.92	100.00%

FEDERAL PROGRAMS - CARL PERKINS	BUDGET	SPENT	REMAINING	PERCENT REMAINING
VOCATIONAL EDUCATION	$ 120,885.20	$ 96,432.78	$ 24,452.42	20.23%
OTHER STUDENT SUPPORT	34,719.93	13,707.90	21,012.03	60.52%
VOCATIONAL EDUCATION	7,000.00	5,688.04	1,311.96	18.74%
TRANSFERS	978.50	-	978.50	100.00%
TOTALS	$ 163,583.63	$ 115,828.72	$ 47,754.91	29.19%

FEDERAL PROGRAMS - IDEA SUPPLEMENTAL	BUDGET	SPENT	REMAINING	PERCENT REMAINING
SPECIAL EDUCATION	7,248.40	5,750.00	1,498.40	20.67%
TOTALS	$ 7,248.40	$ 5,750.00	$ 1,498.40	20.67%

FEDERAL PROGRAMS - IDEA PRESCHOOL DISC.	BUDGET	SPENT	REMAINING	PERCENT REMAINING
SPECIAL EDUCATION	$ 59,042.00	$ 43,199.29	$ 15,842.71	26.83%
SPECIAL EDUCATION	500.00	225.60	274.40	54.88%
TOTALS	$ 59,542.00	$ 43,424.89	$ 16,117.11	27.07%

THE COUNTY BOARD OF EDUCATION REPORTS THE FOLLOWING EXPENDITURES

FOR THE PUBLIC SCHOOL PURPOSE AS OF THE QUARTER ENDING MARCH 31, 2018

FEDERAL PROGRAMS - IDEA DISC. - ASSESSMENT	BUDGET	SPENT	REMAINING	PERCENT REMAINING
SPECIAL EDUCATION	$ 58,119.00	$ 57,956.67	$ 162.33	0.28%
SPECIAL EDUCATION	2,950.00	2,950.00	-	0.00%
TOTALS	$ 61,069.00	$ 60,906.67	$ 162.33	0.27%

FEDERAL PROGRAMS - IDEA	BUDGET	SPENT	REMAINING	PERCENT REMAINING
SPECIAL EDUCATION	$ 2,302,676.00	$ 1,434,639.98	$ 868,036.02	37.70%
TOTALS	$ 2,302,676.00	$ 1,434,639.98	$ 868,036.02	37.70%

FEDERAL PROGRAMS - IDEA CARRYOVER	BUDGET	SPENT	REMAINING	PERCENT REMAINING
SPECIAL EDUCATION	$ 101,083.23	$ 101,083.23	$ -	0.00%
TOTALS	$ 101,083.23	$ 101,083.23	$ -	0.00%

FEDERAL PROGRAMS - SPED PRESCHOOL	BUDGET	SPENT	REMAINING	PERCENT REMAINING
SPECIAL EDUCATION	$ 59,988.00	$ 33,485.54	$ 26,502.46	44.18%
TOTALS	$ 59,988.00	$ 33,485.54	$ 26,502.46	44.18%

FEDERAL PROGRAMS - SPED PRESCHOOL CARRYOVER	BUDGET	SPENT	REMAINING	PERCENT REMAINING
SPECIAL EDUCATION	$ 16,714.28	$ 16,714.28	$ -	0.00%
TOTALS	$ 16,714.28	$ 16,714.28	$ -	0.00%

TOTAL FEDERAL PROGRAMS	$ 6,665,793.87	$ 3,899,002.66	$ 2,766,791.21	41.51%

Hamblen County Commission
Finance Committee
Information Purposes Only

TENNESSEE
Hamblen County
SERVICE • COMMUNITY • INDUSTRY
OFFICE OF THE MAYOR

Report of Budget amendments approved by County Mayor during the month of May

Month MAY Year 2018

Fund	#101

DEPT: **CIVIL DEFENSE**

Account Number	Description	Increase	Decrease
	APPROPRIATIONS:		
	CIVIL DEFENSE		
54410.338	Maintenance and Repair Services	300	
54410.599	Other Charges		300

Brief Descriptions of issue:

To reclassify appropriations to cover needed repairs on the F-250 EMA truck

Requesting Department

Signature: Chris Bell

Title : Director

Date: 5-18-18

Approval by County Mayor

Signature: Bill Sutton

Title : County Mayor

Date: 5-21-18

For Finance Department Only:
Reviewed by: ADH

Budget Amendment 101-066

Return to Committee Cover Page

Hamblen County Commission
Finance Committee
Information Purposes Only

TENNESSEE
Hamblen County
SERVICE · COMMUNITY · INDUSTRY
OFFICE OF THE MAYOR

Report of Budget amendments approved by County Mayor during the month of May

Month MAY Year 2018

Fund #101 *DEPT:* DATA PROCESSING

Account Number	Description	Increase	Decrease
	APPROPRIATIONS:		
	DATA PROCESSING		
52600.709	Data Processing Equipment	9,238	
52600.307	Communication	21	
52600.312	Contracts with Private Agencies		3,059
52600.334	Maintenance Agreements		2,800
52600.355	Travel		600
52600.411	Data Processing Supplies		1,300
52600.524	In Service / Staff Development		1,500

Brief Descriptions of issue:

To reclassify appropriations to cover cost of upgraded pricing for the exchange server

Requesting Department

Signature: [signature]

Title : IT Technician

Date: 5-29-2018

Approval by County Mayor

Signature: Bill Britton

Title : County Mayor

Date: 5-29-18

For Finance Department Only:
Reviewed by: AOH

Budget Amendment 101-070

Return to Committee Cover Page

Hamblen County Commission
Finance Committee
Information Purposes Only

TENNESSEE
Hamblen County
SERVICE · COMMUNITY · INDUSTRY
OFFICE OF THE MAYOR

Report of Budget amendments approved by County Mayor during the month of May

Month MAY Year 2018

Fund #101 *DEPT:* **ELECTION COMMISSION**

Account Number	Description	Increase	Decrease
	APPROPRIATIONS:		
	ELECTION COMMISSION		
51500.334	Maintenance Agreements	2,500	
51500.312	Contracts with Private Agencies		2,270
51500.332	Legal Notices, Recordings, And Court Costs		230

Brief Descriptions of issue:

To reclassify appropriations to cover cost of Knowink Command software

Requesting Department

Signature: Jeff Gardner

Title : AOE

Date: 5/7/18

Approval by County Mayor

Signature: Bill Bunch

Title : County Mayor

Date: May 7, 2018

For Finance Department Only:
Reviewed by: ADH

Budget Amendment 101-062

Return to Committee Cover Page

Hamblen County Commission
Finance Committee
Information Purposes Only

TENNESSEE
Hamblen County
SERVICE • COMMUNITY • INDUSTRY
OFFICE OF THE MAYOR

Report of Budget amendments approved by County Mayor during the month of May

Month MAY Year 2018

Fund #101 *DEPT:* ELECTION COMMISSION

Account Number	Description	Increase	Decrease
	APPROPRIATIONS:		
	ELECTION COMMISSION		
51500.334	Maintenance Agreements	500	
51500.349	Printing, Stationery, and Forms		500

Brief Descriptions of issue:

To reclassify appropriations to cover additional software related expenses through the remainder of FY17-18

Requesting Department

Signature: Jay Gardner

Title : AOE

Date: 5/8/18

Approval by County Mayor

Signature: Bill Bunch

Title : County Mayor

Date: 5-8-2018

For Finance Department Only:
Reviewed by: ADH
Budget Amendment 101-004

Return to Committee Cover Page

Hamblen County Commission
Finance Committee
Information Purposes Only

TENNESSEE
Hamblen County
SERVICE • COMMUNITY • INDUSTRY
OFFICE OF THE MAYOR

Report of Budget amendments approved by County Mayor during the month of May

Month MAY Year 2018

Fund #101 *DEPT:* JAIL

Account Number	Description	Increase	Decrease
	APPROPRIATIONS:		
	JAIL		
54210.441	Prisoners' Clothing	1,000	
54210.599	Other Charges	1,600	
54210.790	Other Equipment	1,550	
54210.716	Law Enforcement Equipment		4,150

Brief Descriptions of issue:

To reclassify appropriations to cover the purchase of additional jail related items through the remainder of FY17-18

Requesting Department

Signature: Debbie Hammond

Title : Executive Assistant

Date: 5-15-18

Approval by County Mayor

Signature: Bill Butcher

Title : County Mayor

Date: 5-15-18

For Finance Department Only:
Reviewed by: ADH
Budget Amendment 101-0005

Return to Committee Cover Page

Hamblen County Commission
Finance Committee
Information Purposes Only

TENNESSEE
Hamblen County
SERVICE • COMMUNITY • INDUSTRY
OFFICE OF THE MAYOR

RECEIVED
MAY 07 2018
OFFICE OF HAMBLEN COUNTY MAYOR

Report of Budget amendments approved by County Mayor during the month of May

Month MAY Year 2018

Fund #101 *DEPT:* JUVENILE COURT

Account Number	Description	Increase	Decrease
	APPROPRIATIONS:		
	JUVENILE COURT		
53500.399	Other Contracted Services	1,000	
53500.435	Office Supplies		1,000

Brief Descriptions of issue:

To reclassify appropriations to cover the additional cost of transport services

Requesting Department

Signature: Cyndi Watts

Title : Director

Date: 5/4/18

Approval by County Mayor

Signature: Bill Brittain

Title : County Mayor

Date: 5/7/18

For Finance Department Only:
Reviewed by: 401H
Budget Amendment 101-063

Return to Committee Cover Page

Hamblen County Commission
Finance Committee
Information Purposes Only

TENNESSEE
Hamblen County
SERVICE · COMMUNITY · INDUSTRY
OFFICE OF THE MAYOR

Report of Budget amendments approved by County Mayor during the month of May

Month MAY Year 2018

Fund #101 *DEPT:* **PROPERTY ASSESSOR**

Account Number	Description	Increase	Decrease
	APPROPRIATIONS:		
	PROPERTY ASSESSOR		
52300.709	Data Processing Equipment	500	
52300.719	Office Equipment		500

Brief Descriptions of issue:

To reclassify appropriations to cover cost of new laptop needed by the Property Assessor's office. One of their current computers is unable to be repaired and a replacement is needed. The new Latitude 5285 will be purchased off of the Statewide Contract. The total cost of the laptop is $1,512.09.

Requesting Department

Signature: J. Keith Ely

Title : Assessor of Property

Date: 5-25-18

Approval by County Mayor

Signature: Bill Burtaci

Title : County Mayor

Date: 5/25/18

For Finance Department Only:
Reviewed by: ADH
Budget Amendment 101-067

posted
5/25/18

Return to Committee Cover Page

Hamblen County Commission
Finance Committee
Information Purposes Only

TENNESSEE
Hamblen County
SERVICE · COMMUNITY · INDUSTRY
OFFICE OF THE MAYOR

Report of Budget amendments approved by County Mayor during the month of May

Month MAY Year 2018

Fund #101 *DEPT:* **PROPERTY ASSESSOR / REAPPRAISAL PROGRAM**

Account Number	Description	Increase	Decrease
	APPROPRIATIONS:		
	PROPERTY ASSESSOR / REAPPRAISAL PROGRAM		
52310.435	Office Supplies	2,000	
52310.331	Legal Services		2,000

Brief Descriptions of issue:

To reclassify appropriations to cover cost of new office furniture and equipment needed for the GIS position

Requesting Department

Signature: J. Keith Ely

Title : Assessor of Property

Date: 5-31-18

Approval by County Mayor

Signature: Bill Brittain

Title : County Mayor

Date: 5-31-18

For Finance Department Only:
Reviewed by: AOH
Budget Amendment 101-072

Return to Committee Cover Page

Hamblen County Commission
Finance Committee
Information Purposes Only

TENNESSEE
Hamblen County
SERVICE • COMMUNITY • INDUSTRY
OFFICE OF THE MAYOR

Report of Budget amendments approved by County Mayor during the month of May

Month MAY Year 2018

Fund #101 *DEPT:* SHERIFF'S DEPT

Account Number	Description	Increase	Decrease
	APPROPRIATIONS:		
	SHERIFF'S DEPT		
54110.450	Tires and Tubes	500	
54110.355	Travel		500

Brief Descriptions of issue:

To reclassify appropriations to cover cost of tires for HCSD vehicle

Requesting Department

Signature: Debbie Hammond

Title : Executive Assistant

Date: 6-1-18

Approval by County Mayor

Signature: Bill Britton

Title : County Mayor

Date: 6-1-18

For Finance Department Only:
Reviewed by: ADH
Budget Amendment 101-071

Return to Committee Cover Page

Hamblen County Commission
Finance Committee
Information Purposes Only

TENNESSEE
Hamblen County
SERVICE · COMMUNITY · INDUSTRY
OFFICE OF THE MAYOR

Report of Budget amendments approved by County Mayor during the month of May

Month MAY Year 2018

Fund #101 *DEPT:* TRUSTEE

Account Number	Description	Increase	Decrease
	APPROPRIATIONS:		
	TRUSTEE		
52400.435	Office Supplies	2,103.08	
52400.349	Printing, Stationery, and Forms		1,262.17
52400.719	Office Equipment		786.87
52400.334	Maintenance Agreements		54.04

Brief Descriptions of issue:

To reclassify appropriations to cover cost of office supplies needed for remainder of FY17-18

Requesting Department

Signature: Jodie Baskett

Title : Trustee

Date: 6/6/18

Approval by County Mayor

Signature: Bill Brittain

Title : County Mayor

Date: 6/7/18

For Finance Department Only:
Reviewed by: AOH
Budget Amendment 101-076

Return to Committee Cover Page

Hamblen County Commission
Finance Committee
Information Purposes Only

TENNESSEE
Hamblen County
SERVICE • COMMUNITY • INDUSTRY
OFFICE OF THE MAYOR

Report of Budget amendments approved by County Mayor during the month of June

Month JUNE Year 2018

Fund #116 *DEPT:* SANITATION DEPARTMENT

Account Number	Description	Increase	Decrease
	APPROPRIATIONS:		
	SANITATION DEPARTMENT		
55710.206	Life Insurance	10	
55710.299	Other Fringe Benefits	450	
55710.207	Medical Insurance		460

Brief Descriptions of issue:

To adjust budgeted line items for needed amounts

Requesting Department

Signature: Barry G. Pool

Title : Hamblen County Road Supt.

Date: 06-06-18

Approval by County Mayor

Signature: Bill Brittain

Title : County Mayor

Date: 6-7-18

For Finance Department Only:
Reviewed by: AOH
Budget Amendment 116-002

Return to Committee Cover Page

Hamblen County Commission
Finance Committee
Information Purposes Only

TENNESSEE
Hamblen County
SERVICE • COMMUNITY • INDUSTRY
OFFICE OF THE MAYOR

Report of Budget amendments approved by County Mayor during the month of May

Month MAY Year 2018

Fund #131 *DEPT:* HIGHWAY DEPARTMENT

Account Number	Description	Increase	Decrease
	APPROPRIATIONS:		
	HIGHWAY DEPARTMENT		
62000.409	Crushed Stone	5,000	
62000.467	Fencing		5,000

Brief Descriptions of issue:

To reclassify appropriations to cover the cost of crushed stone needed for remainder of FY17-18

Requesting Department

Signature: Barry G. Pool

Title : Hamblen County Road Supt.

Date: 05-24-18

Approval by County Mayor

Signature: Bill Brittain

Title : County Mayor

Date: 5/25/18

For Finance Department Only:
Reviewed by: ADH
Budget Amendment 131-006

Posted 5/25/18

Return to Committee Cover Page

Hamblen County Government

PUBLIC SERVICES COMMITTEE

TENNESSEE
Hamblen County
SERVICE • COMMITY • INDUSTRY
PUBLIC SERVICES COMMITTEE

Hubert Davis
Chairman

Tim Goins
Vice-Chairman

Louis "Doe" Jarvis
Ex-Officio

Larry Carter
Member

Randy DeBord
Member

Stancil Ford
Member

Howard Shipley
Member

John Smyth
Member

Johnny Walker
Member

Monday, June 11, 2018
Immediately Following Adjournment of Finance Committee
Rose Center – Prater Hall

AGENDA

1. **Call to Order** – *Chairman Hubert Davis*

2. **Visitors Wishing to Address the Committee** – *Chairman Hubert Davis*
(*Visitors will be allotted 5 minutes to speak)*

3. **Old Business** – *Chairman Hubert Davis*
   a. None

4. **New Business** – *Chairman Hubert Davis*
   a. Franchise Agreement between Hamblen County, Tennessee and Comcast of Kentucky /Tennessee/Virginia, LLC – *County Mayor Bill Brittain*
   b. Resolution to Amend the Zoning Map of Hamblen County, Tennessee by Rezoning District 04, Tax Map 050, Parcels 069.07, 3994 S. Davy Crockett Parkway, Morristown, TN 37813 from A-1 to C-1

5. **Items of Interest (No Action Necessary)** – *Chairman Hubert Davis*
   a. Morristown Hamblen Humane Society Reports

6. **Adjournment** – *Chairman Hubert Davis*

Franchise Agreement

between

Hamblen County, Tennessee

and

Comcast of Kentucky/Tennessee/Virginia, LLC

DRAFT

TABLE OF CONTENTS

		Page
SECTION 1	GRANT OF AUTHORITY	1
SECTION 2	THE CABLE SYSTEM	4
SECTION 3	CUSTOMER SERVICE	7
SECTION 4	COMPENSATION AND OTHER PAYMENTS	7
SECTION 5	COMPLIANCE REPORTS	9
SECTION 6	ENFORCEMENT	10
SECTION 7	ASSIGNMENT AND OTHER TRANSFERS	11
SECTION 8	INSURANCE AND INDEMNITY	12
SECTION 9	MISCELLANEOUS	12
APPENDIX A	DEFINED TERMS	A-1
APPENDIX B	CUSTOMER SERVICE STANDARDS	B-1

DRAFT

AGREEMENT

This ***AGREEMENT*** is effective as of the ____ day of _____, 2018 (the "Effective Date"), and is between Hamblen County, Tennessee (the "Franchising Authority" or the "County"), and Comcast of Kentucky/Tennessee/Virginia LLC (the "Company"). For purposes of this Agreement, unless otherwise defined in this Agreement, the capitalized terms, phrases, words, and their derivations, shall have the meanings set forth in Appendix A.

The Franchising Authority, having determined that the financial, legal, and technical ability of the Company is reasonably sufficient to provide the services, facilities, and equipment necessary to meet the current and future cable-related needs of the community and that, as of the Effective Date, the Company is in material compliance with the terms and conditions of the cable franchise preceding this Agreement, desires to enter into this Agreement with the Company for the construction, operation, and maintenance of a Cable System on the terms and conditions set forth herein. In consideration of the mutual covenants and agreements contained in this Agreement, and other good and valuable consideration, the receipt and sufficiency of which is hereby acknowledged, the parties hereby covenant and agree as follows:

SECTION 1
GRANT OF AUTHORITY

1.1 Grant of Franchise. The Franchising Authority hereby grants under the Cable Act a nonexclusive franchise (the "Franchise") to occupy and use the Streets within the Franchise Area in order to construct operate, maintain, upgrade, repair, and remove the Cable System, and provide Cable Services through the Cable System, subject to the terms and conditions of this Agreement. This Franchise authorizes Cable Service, and it does not grant or prohibit the right(s) of the Company to provide other services.

1.2 Term of Franchise. This Franchise shall be in effect for a period of ten (10) years commencing on the Effective Date, unless renewed or lawfully terminated in accordance with this Agreement and the Cable Act.

1.3 Renewal. Subject to Section 626 of the Cable Act (47 U.S.C. § 546) and such terms and conditions as may lawfully be established by the Franchising Authority, the Franchising Authority reserves the right to grant or deny renewal of the Franchise.

1.4 Reservation of Authority. Nothing in this Agreement shall (i) abrogate the right of the Franchising Authority to perform any public works or public improvements of any description, (ii) be construed as a waiver of any codes or ordinances of the Franchising Authority or of the Franchising Authority's right to require the Company or any Person utilizing the Cable System to secure the appropriate permits or authorizations for its use, or (iii) be construed as a waiver or release of the rights of the Franchising Authority in and to the Streets. Notwithstanding the above, in the event of any conflict between this Agreement and any code or ordinance adopted by the Franchising Authority, the terms and conditions of this Agreement shall prevail.

DRAFT

1.5 Competitive Equity and Subsequent Action Provisions.

1.5.1 Purposes. The Company and the Franchising Authority acknowledge that there is increasing competition in the video marketplace among cable operators, direct broadcast satellite providers, telephone companies, broadband content providers, and others; new technologies are emerging that enable the provision of new and advanced services to County residents; and changes in the scope and application of the traditional regulatory framework governing the provision of Video Services are being considered in a variety of federal, state, and local venues. To foster an environment where all Cable Service Providers and Video Service Providers using the Streets can compete on a competitively neutral and nondiscriminatory basis; encourage the provision of new and advanced services to County residents; promote local communications infrastructure investments and economic opportunities in the County; and provide flexibility in the event of subsequent changes in the law, the Company and the Franchising Authority have agreed to the provisions in this Section 1.5, and these provisions should be interpreted and applied with these purposes in mind. The parties agree that the Franchising Authority shall not be required to execute a franchise agreement or authorization with a competitive CSP or VSP that is identical, word-for-word, with this Agreement to avoid triggering the provisions of this Section 1.5, so long as the regulatory and financial burdens on and benefits to each CSP or VSP are materially equivalent to the burdens on and benefits to the Company. "Materially equivalent" provisions include but are not limited to: franchise fees and the definition of Gross Revenues; system build-out requirements; security instruments; public, education and government access channels and support; customer service standards; and audits.

1.5.2 Fair Terms for All Providers. Notwithstanding any other provision of this Agreement or any other provision of law,

(a) If any VSP or CSP enters into any agreement with the Franchising Authority to provide Video Services or Cable Services to Subscribers in the Franchise Area, the Franchising Authority and the Company, upon written request of the Company, will use best efforts in good faith to negotiate the Company's proposed Franchise modifications, and such negotiation will proceed and conclude within sixty (60) days, unless that period is reduced or extended by mutual agreement of the parties. If the Franchising Authority and the Company agree to Franchise modifications pursuant to such negotiations, then the Franchising Authority shall amend this Agreement to include the modifications.

If there is no written agreement or other authorization between the new VSP or CSP and the Franchising Authority, the Company and the Franchising Authority shall use the sixty (60) day period to develop and enter into an agreement or other appropriate authorization (to the extent the Company determines an agreement or authorization is necessary) that to the maximum extent possible contains provisions that will ensure competitive equity between the Company and other VSPs or CSPs, taking into account the terms and conditions under which the new VSP or CSP is allowed to provide Video Services or Cable Services to Subscribers in the Franchise Area.

DRAFT

(b) Following the Franchise modification negotiations provided for in Section 1.5.2(a), if the Franchising Authority and the Company fail to reach agreement in such negotiations, the Company may, at its option, elect to replace this Agreement by opting in to the same franchise agreement or other lawful authorization that the Franchising Authority has granted to the new VSP or CSP. If the Company so elects, the Franchising Authority shall adopt the Company's replacement agreement at the next regularly scheduled county commission meeting.

(c) The Franchising Authority shall at all times enforce the state and federal ban on providing Cable Service without a franchise. The Franchising Authority's enforcement efforts shall be continuous and diligent throughout the term of this Agreement. Should the Franchising Authority not commence enforcement efforts within sixty (60) days of becoming aware of a VSP or CSP providing Video Service or Cable Service within the Franchise Area, the Company shall have the right to petition the Franchising Authority for the relief provided in Section 1.5.2 above.

(d) This Section 1.5.2 shall not apply for VSPs or CSPs providing Video Service or Cable Service in the Franchise Area under the authorization of the Tennessee Competitive Cable & Video Services Act of 2008 (T.C.A. § 7-59-301, *et seq.*).

1.5.3 Subsequent Change in Law. If there is a change in federal, state, or local law that provides for a new or alternative form of authorization, subsequent to the Effective Date, for a VSP or CSP utilizing the Streets to provide Video Services or Cable Services to Subscribers in the Franchise Area, or that otherwise changes the nature or extent of the obligations that the Franchising Authority may request from or impose on a VSP or CSP providing Video Services or Cable Services to Subscribers in the Franchise Area, the Franchising Authority agrees that, notwithstanding any other provision of law, upon the written request and at the option of the Company, the Franchising Authority shall: (i) permit the Company to provide Video Services or Cable Services to Subscribers in the Franchise Area on substantially the same terms and conditions as are applicable to a VSP or CSP under the changed law; (ii) modify this Agreement to comply with the changed law; or (iii) modify this Agreement to ensure competitive equity between the Company and other VSPs or CSPs, taking into account the conditions under which other VSPs or CSPs are permitted to provide Video Services or Cable Services to Subscribers in the Franchise Area. The Franchising Authority and the Company shall implement the provisions of this Section 1.5.3 within sixty (60) days after the Company submits a written request to the Franchising Authority. Should the Franchising Authority fail to implement these provisions within the time specified, this Agreement shall, at the Company's option and upon written notice to the Franchising Authority, be deemed amended as initially requested by the Company under this Section 1.5.3. Notwithstanding any provision of law that imposes a time or other limitation on the Company's ability to take advantage of the changed law's provisions, the Company may exercise its rights under this Section 1.5.3 at any time, but not sooner than thirty (30) days after the changed law goes into effect.

DRAFT

1.5.4 Effect on This Agreement. Any agreement, authorization, right, or determination to provide Cable Services or Video Services to Subscribers in the Franchise Area under this Section 1.5 shall supersede this Agreement.

SECTION 2
THE CABLE SYSTEM

2.1 The System and Its Operations.

2.1.1 Service Area. As of the Effective Date, the Company operates a Cable System within the Franchise Area.

2.1.2 System. As of the Effective Date, the Company maintains and operates a Cable System capable of providing over 250 Channels of Video Programming, which Channels may be delivered by analog, digital, or other transmission technologies, at the sole discretion of the Company.

2.1.3 System Technical Standards. Throughout the term of this Agreement, the Cable System shall be designed, maintained, and operated such that quality and reliability of System Signal will be in compliance with all applicable consumer electronics equipment compatibility standards, including but not limited to Section 624A of the Cable Act (47 U.S.C. § 544a) and 47 C.F.R. § 76.630, as may be amended from time to time.

2.1.4 Testing Procedures; Technical Performance. Throughout the term of this Agreement, the Company shall operate and maintain the Cable System in accordance with the testing procedures and the technical performance standards of the FCC.

2.2 Requirements with Respect to Work on the System.

2.2.1 General Requirements. The Company shall comply with ordinances, rules, and regulations established by the Franchising Authority pursuant to the lawful exercise of its police powers and generally applicable to all users of the Streets. To the extent that local ordinances, rules, or regulations clearly conflict with the terms and conditions of this Agreement, the terms and conditions of this Agreement shall prevail, except where such conflict arises from the Franchising Authority's lawful exercise of its police powers.

2.2.2 Protection of Underground Utilities. Both the Company and the Franchising Authority shall comply with the Tennessee Underground Utility Damage Prevention Act (T.C.A. § 65-31-101, *et seq.*), relating to notification prior to excavation near underground utilities, as may be amended from time to time.

2.3 Permits and General Obligations.

2.3.1 The Company shall be responsible for obtaining all permits, licenses, or other forms of approval or authorization necessary to construct, operate, maintain, or repair the Cable System, or any part thereof, prior to the commencement of any such activity. The Franchising Authority shall not charge the Company, and the Company shall not be required to pay, any fee or charge for the issuance of permits, licenses, or other

DRAFT

approvals, as such payments are included in the franchise fees described in Section 4 below. The Franchising Authority shall make all reasonable efforts to issue permits, licenses, or other approvals within ten (10) business days. The Company shall be solely responsible, either through its employees or its authorized contractors, for constructing, installing, and maintaining the Cable System in a safe, thorough, and reliable manner in accordance with all applicable standards and using materials of good and durable quality. The Company shall assure that any person installing, maintaining, or removing its facilities is fully qualified and familiar with all applicable standards. No third party shall tamper with, relocate, or otherwise interfere with the Company's facilities in the rights-of-way without the Company's approval and supervision; provided, however, that the Company shall make all reasonable efforts to coordinate with other users of the Streets to facilitate the execution of projects and minimize disruption in the public rights-of-way. All transmission and distribution structures, poles, other lines, and equipment installed by the Company for use in the Cable System in accordance with this Agreement shall be located so as to minimize interference with the proper use of the Streets and the rights and reasonable convenience of property owners who own property adjoining the Streets.

2.3.2 Code Compliance. The Company shall comply with all applicable building, safety, and construction codes. The parties agree that at present, Cable Systems are not subject to the low voltage regulations of the National Electric Code, National Electrical Safety Code, or other such codes or regulations. In the event that the applicable codes are revised such that Cable Systems become subject to low voltage regulations without being grandfathered or otherwise exempted, the Company will thereafter be required to comply with those regulations.

2.4 Conditions on Street Occupancy.

2.4.1 New Grades or Lines. If the grades or lines of any Street within the Franchise Area are lawfully changed at any time during the term of this Agreement, then the Company shall, upon at least ninety (90) days' advance written notice from the Franchising Authority and at its own cost and expense, protect or promptly alter or relocate the Cable System, or any part thereof, so as to conform with the new grades or lines. If public funds are available to any Person using the Street for the purpose of defraying the cost of any of the foregoing work, the Franchising Authority shall make application for such funds on behalf of the Company. The Company shall be entitled to reimbursement of its costs should any other utility be so compensated as a result of a required protection, alteration, or relocation of its facilities. Notwithstanding the above, the Company shall not be liable for the cost of protecting, altering, or relocating facilities, aerial or underground, where such work is required to accommodate a streetscape, sidewalk, or private development project.

2.4.2 Relocation at Request of Third Party. The Company shall, upon reasonable prior written request of any Person holding a permit issued by the Franchising Authority to move any structure, temporarily move its wires to permit the moving of such structure; provided (i) the Company may impose a reasonable charge on any Person for the movement of its wires, and such charge may be required to be paid in advance of the movement of its wires; and (ii) the Company agrees to arrange for such temporary

relocation to be accomplished as soon as reasonably practicable, not to exceed ninety (90) days without the prior agreement of the Franchising Authority.

2.4.3 Restoration of Streets. If in connection with construction, operation, maintenance, or repair of the Cable System, the Company disturbs, alters, or damages any Street, the Company agrees that it shall at its own cost and expense restore the Street according to the standards set forth in the Tennessee Department of Transportation's Rules and Regulations for Accommodating Utilities Within Highway Rights-of-Way. If the Franchising Authority reasonably believes that the Company has not restored the Street appropriately, then the Franchising Authority, after providing ten (10) business days' advance written notice and a reasonable opportunity to cure, may have the Street restored and bill the Company for the cost of restoration.

2.4.4 Trimming of Trees and Shrubbery. The Company shall have the authority to trim trees or other natural growth overhanging any of its Cable System in the Franchise Area so as to prevent contact with the Company's wires, cables, or other equipment, the cost of which trimming shall not be borne by the Franchising Authority.

2.4.5 Aerial and Underground Construction. If at the time of Cable System construction all of the transmission and distribution facilities of all of the respective public or municipal utilities in the construction area are underground, the Company shall place its Cable System's transmission and distribution facilities underground. At the time of Cable System construction, in any place within the Franchise Area where the transmission or distribution facilities of the respective public or municipal utilities are both aerial and underground, the Company shall have the discretion to construct, operate, and maintain all of its transmission and distribution facilities, or any part thereof, aerially or underground; however, at such time as all existing aerial facilities of the respective public or municipal utilities are placed underground, the Company shall likewise place its facilities underground, subject to the provisions of Section 2.4.1. Company facilities placed underground at the property owner's request in any area where any of the transmission or distribution facilities of the respective public or municipal utilities are aerial shall be installed with the additional expense paid by the property owner. Nothing in this Section 2.4.5 shall be construed to require the Company to construct, operate, or maintain underground any ground-mounted appurtenances such as customer taps, line extenders, system passive devices, amplifiers, power supplies, pedestals, or other related equipment.

2.4.6 New Developments. The Franchising Authority shall provide the Company with written notice of the issuance of building or development permits for planned developments within the Franchise Area requiring undergrounding of cable facilities. The Franchising Authority agrees to require the developer to give the Company access to open trenches for deployment of cable facilities and at least thirty (30) days' written notice of the date of availability of open trenches. Notwithstanding the foregoing, the Company shall not be required to utilize any open trench.

2.4.7 Use of Existing Poles. Where possible, the Company shall attach its facilities to existing utility poles and shall use all reasonable efforts to enter into a pole attachment

agreement with the owners of such existing utility poles. The Franchising Authority acknowledges that the Company may pass through to Subscribers the costs of attaching to existing utility poles in the Franchise Area, and does not object.

2.5 Change in Franchise Area. In the event that the borders of the Franchise Area change, through annexation or otherwise, the Franchising Authority shall provide to the Company written notice of such change, including an updated map and an electronic list of all addresses in the Franchise Area. Franchise fees on gross revenues earned from Subscribers in annexed areas shall not be payable to the Franchising Authority until sixty (60) days after the Company's receipt of such updated map and electronic list of addresses, and shall not be remitted to the Franchising Authority until the next regularly scheduled quarterly franchise fee payment as provided in Section 4.1.2 below.

SECTION 3
CUSTOMER SERVICE

Customer Service. The Company shall comply in all respects with the requirements set forth in Appendix B. Individual violations of those requirements do not constitute a breach of this Agreement.

SECTION 4
COMPENSATION AND OTHER PAYMENTS

4.1 Compensation to the Franchising Authority. As compensation for the Franchise, the Company shall pay or cause to be paid to the Franchising Authority the amounts set forth in this Section 4.1.

4.1.1 Franchise Fees—Amount. The Company shall pay to the Franchising Authority franchise fees in an amount equal to five percent (5%) of Gross Revenues derived from the operation of the Cable System to provide Cable Services in the Franchise Area.

4.1.2 Franchise Fees—Payment. Payments of franchise fees shall be made on a quarterly basis and shall be remitted not later than thirty (30) days after the last day of March, June, September, and December throughout the term of this Agreement.

4.1.3 Company to Submit Franchise Fee Report. The Company shall submit to the Franchising Authority, not later than thirty (30) days after the last day of March, June, September, and December throughout the term of this Agreement, a report setting forth the basis for the computation of Gross Revenues on which the quarterly payment of franchise fees is being made, which report shall enumerate, at a minimum, the following revenue categories: limited and expanded basic video service, digital video service, premium video service, pay-per-view and video-on-demand, equipment, installation and activation, franchise fees, guide, late fees, ad sales, home shopping commissions, and bad debt.

4.1.4 Franchise Fee Payments Subject to Audit; Remedy for Underpayment. No acceptance of any franchise fee payment by the Franchising Authority shall be construed as an accord and satisfaction that the amount paid is in fact the correct amount or a

release of any claim that the Franchising Authority may have for further or additional sums payable under this Agreement. The Franchising Authority may conduct an audit no more than once annually to ensure payments in accordance with this Agreement. The audit of the Company's records shall take place at a location, in the State of Tennessee, determined by the Company. The Franchising Authority is prohibited from removing any records, files, spreadsheets, or any other documents from the site of the audit. In the event that the Franchising Authority takes notes of any documents, records, or files of the Company for use in the preparation of an audit report, all notes shall be returned to the Company upon completion of the audit. The audit period shall be limited to three (3) years preceding the end of the quarter of the most recent payment. Once the Company has provided information for an audit with respect to any period, regardless of whether the audit was completed, that period shall not again be the subject of any audit.

If, as a result of an audit or any other review, the Franchising Authority determines that the Company has underpaid franchise fees in any twelve (12) month period by ten percent (10%) or more, then, in addition to making full payment of the relevant obligation, the Company shall reimburse the Franchising Authority for all of the reasonable costs associated with the audit or review, including all reasonable out-of-pocket costs for attorneys, accountants, and other consultants. The Franchising Authority shall provide the Company with a written notice of audit results and a copy of the final report presented to the Franchising Authority. The Company shall remit any undisputed amounts owed to the Franchising Authority as the result of the audit within forty-five (45) days, or other mutually acceptable timeframe, after the date of an executed settlement and release agreement.

4.2 Payments Not to Be Set Off Against Taxes or Vice Versa. The parties agree that the compensation and other payments to be made pursuant to this Section 4 are not a tax and are not in the nature of a tax. The Company and the Franchising Authority further agree that franchise fee payments required under Section 4.1.1 shall be in lieu of any permit fees, business license fees, and occupational license fees as are or may be required by the Franchising Authority. The Franchising Authority and the Company further agree that no additional taxes, licenses, fees, surcharges, or other assessments shall be assessed on the Company related to the provision of services or the operation of the Cable System, nor shall the Franchising Authority levy any other tax, license, fee, or assessment on the Company or its Subscribers that is not generally imposed and applicable to a majority of all other businesses.

4.3 Interest on Late Payments. If any payment required by this Agreement is not actually received by the Franchising Authority on or before the applicable date fixed in this Agreement, the Company shall pay interest thereon, from the due date to the date paid, at a rate of one percent (1%) per month.

4.4 Complimentary Installation and Service. The Company shall, within thirty (30) days of receipt of a written request by the Franchising Authority, provide complimentary standard installation and complimentary Basic Service on one outlet for each public primary or secondary school and public library located within the Franchise Area no more than one hundred twenty-five (125) feet from the nearest point of connection to the distribution plant. The Company may provide a discount rate if the Franchising Authority requests additional outlets at a public

primary or secondary school or public library. If a public primary or secondary school or public library within the Franchise Area is located more than one hundred twenty-five (125) feet from the nearest point of connection to the distribution plant, the Company shall, within thirty (30) days of receipt of a written request from the Franchising Authority, provide a written estimate for the cost of extending the distribution plant to the school or library, as well as any necessary interior wiring costs.

SECTION 5
COMPLIANCE REPORTS

5.1 Compliance. The Franchising Authority hereby acknowledges that as of the Effective Date, the Company is in material compliance with the terms and conditions of the cable franchise preceding this Agreement and all material laws, rules, and ordinances of the Franchising Authority.

5.2 Reports. Upon written request by the Franchising Authority and subject to Section 631 of the Cable Act, the Company shall promptly submit to the Franchising Authority such information as may be necessary to reasonably demonstrate the Company's compliance with any term or condition of this Agreement.

5.3 File for Public Inspection. Throughout the term of this Agreement, the Company shall maintain and make available to the public those documents required pursuant to the FCC's rules and regulations.

5.4 Treatment of Proprietary Information. The Franchising Authority agrees to treat as confidential, to the maximum extent allowed under the Tennessee Open Records Act (T.C.A. § 10-7-501, *et seq.*) or other applicable law, any requested documents submitted by the Company to the Franchising Authority that are labeled as "Confidential" or "Trade Secret" prior to submission. In the event that any documents submitted by the Company to the Franchising Authority are subject to a request for inspection or production, including but not limited to a request under the Tennessee Open Records Act, the Franchising Authority shall notify the Company of the request as soon as practicable and in any case prior to the release of such information, by email or facsimile to the addresses provided in Section 9.6 of this Agreement, so that the Company may take appropriate steps to protect its interests in the requested records, including seeking an injunction against the release of the requested records. Upon receipt of said notice, the Company may review the requested records in the Franchising Authority's possession and designate as "Confidential" or "Trade Secret" any additional portions of the requested records that contain confidential or proprietary information.

5.5 Emergency Alert System. Company shall install and maintain an Emergency Alert System in the Franchise Area only as required under applicable federal and state laws. Additionally, the Franchising Authority shall permit only those Persons appropriately trained and authorized in accordance with applicable law to operate the Emergency Alert System equipment and shall take reasonable precautions to prevent any use of the Company's Cable System in any manner that results in inappropriate use thereof, or any loss or damage to the Cable System. Except to the extent expressly prohibited by law, the Franchising Authority shall hold the

DRAFT

Company and its employees, officers, and assigns harmless from any claims arising out of use of the Emergency Alert System, including but not limited to reasonable attorneys' fees and costs.

SECTION 6
ENFORCEMENT

6.1 Notice of Violation. If the Franchising Authority believes that the Company has not complied with the terms of this Agreement, the Franchising Authority shall first informally discuss the matter with the Company. If discussions do not lead to a resolution of the problem, the Franchising Authority shall notify the Company in writing of the nature of the alleged noncompliance ("Violation Notice").

6.2 Company's Right to Cure or Respond. The Company shall have thirty (30) days from the receipt of the Violation Notice, or any longer period specified by the Franchising Authority, to respond; cure the alleged noncompliance; or, if the alleged noncompliance, by its nature, cannot be cured within thirty (30) days, initiate reasonable steps to remedy the matter and provide the Franchising Authority a projected resolution date in writing.

6.3 Hearing. If the Company fails to respond to the Violation Notice received from the Franchising Authority, or the alleged noncompliance is not remedied within the cure period set forth above, the Franchising Authority's governing body shall schedule a hearing if it intends to continue its investigation into the matter. The Franchising Authority shall provide the Company at least thirty (30) days' prior written notice of the hearing, specifying the time, place, and purpose of the hearing. The Company shall have the right to present evidence and to question witnesses. The Franchising Authority shall determine if the Company has committed a violation and shall make written findings of fact relative to its determination. If a violation is found, the Company may petition for reconsideration before any competent tribunal having jurisdiction over such matters.

6.4 Enforcement. Subject to applicable federal and state law, if after the hearing provided for in Section 6.3, the Franchising Authority determines that the Company is in default of the provisions addressed in the Violation Notice, the Franchising Authority may

(a) seek specific performance;

(b) commence an action at law for monetary damages or seek other equitable relief; or

(c) in the case of a substantial default of a material provision of this Agreement, seek to revoke the Franchise in accordance with subsection 6.5 below.

6.5 Revocation.

6.5.1 After the hearing and determination provided for in Section 6.3 and prior to the revocation or termination of the Franchise, the Franchising Authority shall give written notice to the Company of its intent to revoke the Franchise on the basis of an alleged substantial default of a material provision of this Agreement. The notice shall set forth the exact nature of the alleged default. The Company shall have thirty (30) days from receipt of such notice to submit its written objection to the Franchising Authority or to

cure the alleged default. If the Franchising Authority is not satisfied with the Company's response, the Franchising Authority may seek to revoke the Franchise at a public hearing. The Company shall be given at least thirty (30) days' prior written notice of the public hearing, specifying the time and place of the hearing and stating the Franchising Authority's intent to revoke the Franchise.

6.5.2 At the public hearing, the Company shall be permitted to state its position on the matter, present evidence, and question witnesses, after which the Franchising Authority's governing board shall determine whether or not the Franchise shall be revoked. The public hearing shall be on the record and a written transcript shall be made available to the Company within ten (10) business days. The decision of the Franchising Authority's governing board shall be made in writing and shall be delivered to the Company. The Company may appeal such decision to an appropriate court, which shall have the power to review the decision of the Franchising Authority's governing board. The Company may continue to operate the Cable System until all legal appeals procedures have been exhausted.

6.5.3 Notwithstanding the provisions of this Section 6, the Company does not waive any of its rights under federal law or regulation.

6.6 Technical Violations. The parties hereby agree that it is not the Franchising Authority's intention to subject the Company to penalties, fines, forfeiture, or revocation of the Agreement for so-called "technical" breach(es) or violation(s) of the Agreement, where the violation was a good faith error that resulted in no or minimal negative impact on the Subscribers within the Franchise Area or where strict performance would result in practical difficulties and hardship to the Company which outweigh the benefit to be derived by the Franchising Authority or Subscribers.

SECTION 7
ASSIGNMENTS AND OTHER TRANSFERS

The Franchise shall be fully transferable to any successor in interest to the Company. A notice of transfer shall be filed by the Company to the Franchising Authority within forty-five (45) days of such transfer. The transfer notification shall consist of an affidavit signed by an officer or general partner of the transferee that contains the following:

(a) an affirmative declaration that the transferee shall comply with the terms and conditions of this Agreement, all applicable federal, state, and local laws, regulations, and ordinances regarding the placement and maintenance of facilities in any public right-of-way that are generally applicable to users of the public right-of-way and specifically including the Tennessee Underground Utility Damage Prevention Act (T.C.A. § 65-31-101, *et seq.*);

(b) a description of the transferee's service area; and

(c) the location of the transferee's principal place of business and the name or names of the principal executive officer or officers of the transferee.

No affidavit shall be required, however, for (i) a transfer in trust, by mortgage, hypothecation, or by assignment of any rights, title, or interest of the Company in the Franchise or in the Cable System in order to secure indebtedness, or (ii) a transfer to an entity directly or indirectly owned or controlled by Comcast Corporation.

SECTION 8
INSURANCE AND INDEMNITY

8.1 Insurance.

8.1.1 Liability Insurance. Throughout the term of this Agreement, the Company shall, at its sole expense, maintain comprehensive general liability insurance, issued by a company licensed to do business in the State of Tennessee with a rating of not less than "A minus," and provide the Franchising Authority certificates of insurance demonstrating that the Company has obtained the insurance required in this Section 8.1.1. This liability insurance policy or policies shall be in the minimum amount of One Million Dollars ($1,000,000.00) for bodily injury or death of any one person, One Million Dollars ($1,000,000.00) for bodily injury or death of any two or more persons resulting from one occurrence, and One Million Dollars ($1,000,000.00) for property damage resulting from any one accident. The policy or policies shall not be canceled except upon thirty (30) days' prior written notice of cancellation to the County.

8.1.2 Workers' Compensation. The Company shall ensure its compliance with the Tennessee Workers' Compensation Act.

8.2 Indemnification. The Company shall indemnify, defend, and hold harmless the Franchising Authority, its officers, employees, and agents acting in their official capacities from and against any liability or claims resulting from property damage or bodily injury (including accidental death) that arise out of the Company's construction, operation, maintenance, or removal of the Cable System, including but not limited to reasonable attorneys' fees and costs, provided that the Franchising Authority shall give the Company written notice of its obligation to indemnify and defend the Franchising Authority within ten (10) business days of receipt of a claim or action pursuant to this Section 8.2. If the Franchising Authority determines that it is necessary for it to employ separate counsel, the costs for such separate counsel shall be the responsibility of the Franchising Authority. Notwithstanding the foregoing, the Company shall not be obligated to indemnify the Franchising Authority for any damages, liability, or claims resulting from the willful misconduct or negligence of the Franchising Authority or for the Franchising Authority's use of the Cable System.

8.3 Liability and Indemnity. In accordance with Section 635A of the Cable Act, the Franchising Authority, its officials, employees, members, or agents shall have no liability to the Company arising from the regulation of Cable Service or from a decision of approval or disapproval with respect to a grant, renewal, transfer, or amendment of this Franchise. Any relief, to the extent such relief is required by any other provision of federal, state, or local law, shall be limited to injunctive relief and declaratory relief.

DRAFT

SECTION 9
MISCELLANEOUS

9.1 Controlling Authorities. This Agreement is made with the understanding that its provisions are controlled by the Cable Act, other federal laws, state laws, and all applicable local laws, ordinances, and regulations. To the extent such local laws, ordinances, or regulations clearly conflict with the terms and conditions of this Agreement, the terms and conditions of this Agreement shall prevail, except where such conflict arises from the Franchising Authority's lawful exercise of its police powers.

9.2 Appendices. The Appendices to this Agreement and all portions thereof are, except as otherwise specified in this Agreement, incorporated by reference in and expressly made a part of this Agreement.

9.3 Enforceability of Agreement; No Opposition. By execution of this Agreement, the Company and the Franchising Authority acknowledge the validity of the terms and conditions of this Agreement under applicable law in existence on the Effective Date and pledge that they will not assert in any manner at any time or in any forum that this Agreement, the Franchise, or the processes and procedures pursuant to which this Agreement was entered into and the Franchise was granted are not consistent with the applicable law in existence on the Effective Date.

9.4 Governmental Powers. The Franchising Authority expressly reserves the right to exercise the full scope of its powers, including both its police power and contracting authority, to promote the public interest and to protect the health, safety, and welfare of the citizens of Hamblen County, Tennessee.

9.5 Entire Agreement. This Agreement, including all Appendices, embodies the entire understanding and agreement of the Franchising Authority and the Company with respect to the subject matter hereof and merges and supersedes all prior representations, agreements, and understandings, whether oral or written, between the Franchising Authority and the Company with respect to the subject matter hereof, including without limitation all prior drafts of this Agreement and any Appendix to this Agreement, and any and all written or oral statements or representations by any official, employee, agent, attorney, consultant, or independent contractor of the Franchising Authority or the Company. All ordinances or parts of ordinances or other agreements between the Company and the Franchising Authority that are in conflict with the provisions of this Agreement are hereby declared invalid and superseded.

9.6 Notices. All notices shall be in writing and shall be sufficiently given and served upon the other party by first class mail, registered or certified, return receipt requested, postage prepaid; by third-party commercial carrier; or via facsimile (with confirmation of transmission) and addressed as follows:

THE FRANCHISING AUTHORITY:
Hamblen County
Attn: Mayor
511 West Second North Street
Morristown, Tennessee 37814

DRAFT

COMPANY:
Comcast of Kentucky/Tennessee/Virginia LLC
Attn: Vice President, External Affairs
6200 The Corners Parkway, Suite 200
Peachtree Corners, Georgia 30092

With a copy to: Comcast Cable Communications, LLC
Attn: Vice President, Government Affairs
2605 Circle 75 Parkway
Atlanta, Georgia 30339

And: Comcast Cable Communications, LLC
Attn: Legal Department
One Comcast Center
1701 John F. Kennedy Boulevard
Philadelphia, Pennsylvania 19103

9.7 Additional Representations and Warranties. In addition to the representations, warranties, and covenants of the Company to the Franchising Authority set forth elsewhere in this Agreement, the Company represents and warrants to the Franchising Authority and covenants and agrees (which representations, warranties, covenants and agreements shall not be affected or waived by any inspection or examination made by or on behalf of the Franchising Authority) that, as of the Effective Date:

9.7.1 Organization, Standing, and Authorization. The Company is a limited liability company validly existing and in good standing under the laws of the State of Delaware and is duly authorized to do business in the State of Tennessee and in the Franchise Area.

9.7.2 Compliance with Law. The Company, to the best of its knowledge, has obtained all government licenses, permits, and authorizations necessary for the operation and maintenance of the Cable System.

9.8 Maintenance of System in Good Working Order. Until the termination of this Agreement and the satisfaction in full by the Company of its obligations under this Agreement, in consideration of the Franchise, the Company agrees that it will maintain all of the material properties, assets, and equipment of the Cable System, and all such items added in connection with any upgrade, in good repair and proper working order and condition throughout the term of this Agreement.

9.9 Binding Effect. This Agreement shall be binding upon and inure to the benefit of the parties hereto and their respective successors, permitted transferees, and assigns. All of the provisions of this Agreement apply to the Company, its successors, and assigns.

9.10 No Waiver; Cumulative Remedies. No failure on the part of the Franchising Authority or the Company to exercise, and no delay in exercising, any right or remedy hereunder including without limitation the rights and remedies set forth in this Agreement, shall operate as a waiver

DRAFT

thereof, nor shall any single or partial exercise of any such right or remedy preclude any other right or remedy, all subject to the conditions and limitations established in this Agreement. The rights and remedies provided in this Agreement including without limitation the rights and remedies set forth in Section 6 of this Agreement, are cumulative and not exclusive of any remedies provided by law, and nothing contained in this Agreement shall impair any of the rights or remedies of the Franchising Authority or Company under applicable law, subject in each case to the terms and conditions of this Agreement.

9.11 Severability. If any section, subsection, sentence, clause, phrase, or other portion of this Agreement is, for any reason, declared invalid, in whole or in part, by any court, agency, commission, legislative body, or other authority of competent jurisdiction, such portion shall be deemed a separate, distinct, and independent portion. Such declaration shall not affect the validity of the remaining portions of this Agreement, which shall continue in full force and effect.

9.12 No Agency. The Company shall conduct the work to be performed pursuant to this Agreement as an independent entity and not as an agent of the Franchising Authority.

9.13 Governing Law. This Agreement shall be deemed to be executed in Hamblen County, Tennessee, and shall be governed in all respects, including validity, interpretation, and effect, by and construed in accordance with the laws of the State of Tennessee, as applicable to contracts entered into and to be performed entirely within that state.

9.14 Claims Under Agreement. The Franchising Authority and the Company, agree that, except to the extent inconsistent with Section 635 of the Cable Act (47 U.S.C. § 555), any and all claims asserted by or against the Franchising Authority arising under this Agreement or related thereto shall be heard and determined either in a court of the United States located in Tennessee ("Federal Court") or in a court of the State of Tennessee of appropriate jurisdiction ("Tennessee State Court"). To effectuate this Agreement and intent, the Company agrees that if the Franchising Authority initiates any action against the Company in Federal Court or in Tennessee State Court, service of process may be made on the Company either in person or by registered mail addressed to the Company at its offices as defined in Section 9.6, or to such other address as the Company may provide to the Franchising Authority in writing.

9.15 Modification. The Company and Franchising Authority may at any time during the term of this Agreement seek a modification, amendment, or waiver of any term or condition of this Agreement. No provision of this Agreement nor any Appendix to this Agreement shall be amended or otherwise modified, in whole or in part, except by an instrument, in writing, duly executed by the Franchising Authority and the Company, which amendment shall be authorized on behalf of the Franchising Authority through the adoption of an appropriate resolution, letter of agreement, or order by the Franchising Authority, as required by applicable law.

9.16 Delays and Failures Beyond Control of Company. Notwithstanding any other provision of this Agreement, the Company shall not be liable for delay in performance of, or failure to perform, in whole or in part, its obligations pursuant to this Agreement due to strike, war or act of war (whether an actual declaration of war is made or not), insurrection, riot, act of public enemy, accident, fire, flood or other act of God, technical failure, sabotage, or other events,

where the Company has exercised all due care in the prevention thereof, to the extent that such causes or other events are beyond the control of the Company and such causes or events are without the fault or negligence of the Company. In the event that any such delay in performance or failure to perform affects only part of the Company's capacity to perform, the Company shall perform to the maximum extent it is able to do so and shall take all steps within its power to correct such cause(s). The Company agrees that in correcting such cause(s), it shall take all reasonable steps to do so in as expeditious a manner as possible. The Company shall promptly notify the Franchising Authority in writing of the occurrence of an event covered by this Section 9.16.

9.17 Duty to Act Reasonably and in Good Faith. The Company and the Franchising Authority shall fulfill their obligations and exercise their rights under this Agreement in a reasonable manner and in good faith. Notwithstanding the omission of the words "reasonable," "good faith," or similar terms in the provisions of this Agreement, every provision of this Agreement is subject to this section.

9.18 Contractual Rights Retained. Nothing in this Agreement is intended to impair the contractual rights of the Franchising Authority or the Company under this Agreement.

9.19 No Third-Party Beneficiaries. Nothing in this Agreement, or any prior agreement, is or was intended to confer third-party beneficiary status on any member of the public to enforce the terms of such agreements or Franchise.

DRAFT

IN WITNESS WHEREOF, the party of the first part, by its Mayor, thereunto duly authorized by the County Commission of said Franchising Authority, has caused the name of said Franchising Authority to be hereunto signed and the corporate seal of said Franchising Authority to be hereunto affixed, and the Company, the party of the second part, by its officers thereunto duly authorized, has caused its name to be hereunto signed and its seal to be hereunto affixed as of the date and year first above written.

Hamblen County, Tennessee

By: _____
Name:
Title: Mayor
(Seal)

Attest: _____

Date: _____

Comcast of Kentucky/Tennessee/Virginia LLC

By: _____
Name: Douglas R. Guthrie
Title: Regional Senior Vice President

Attest: _____

Date: _____

DRAFT

APPENDIX A
DEFINED TERMS

For purposes of the Agreement to which this Appendix A is appended, the following terms, phrases, words, and their derivations shall have the meanings set forth herein, unless the context clearly indicates that another meaning is intended.

"**Agreement**" means the Agreement to which this Appendix A is appended, together with all Appendices attached thereto and all amendments or modifications thereto.

"**Basic Service**" means any service tier that includes the retransmission of local television broadcast Signals and any equipment or installation used in connection with Basic Service.

"**Cable Act**" means Title VI of the Communications Act of 1934 as amended, 47 U.S.C. § 521, *et seq.*

"**Cable Service**" means the one-way transmission to Subscribers of Video Programming or other programming service and Subscriber interaction, if any, which is required for the selection or use of such Video Programming or other programming service. "Cable Service" does not include any Video Programming provided by a commercial mobile service provider as defined in 47 U.S.C. §332(d).

"**Cable Service Provider**" or "**CSP**" means any person or group of persons (A) who provides Cable Service over a Cable System and directly or through one or more affiliates owns a significant interest in such Cable System, or (B) who otherwise controls or is responsible for, through any arrangement, the management and operation of such a Cable System.

"**Cable System**" means a facility, consisting of a set of closed transmission paths and associated Signal generation, reception, and control equipment, that is designed to provide Cable Service, which includes Video Programming and which is provided to multiple Subscribers within a community, but "Cable System" does not include:

(A) a facility that serves only to retransmit the television Signals of one (1) or more television broadcast stations;

(B) a facility that serves Subscribers without using any public right-of-way as defined herein;

(C) a facility of a common carrier which is subject, in whole or in part, to the provisions of 47 U.S.C. §§201–276, except that such facility shall be considered a Cable System, other than for purposes of 47 U.S.C. § 541(c), to the extent such facility is used in the transmission of Video Programming directly to Subscribers, unless the extent of such use is solely to provide interactive on-demand services;

(D) an open video system that complies with 47 U.S.C. § 573; or

DRAFT

(E) any facilities of any electric utility used solely for operating its electric utility system.

"**Channel**" means a "cable channel" or "channel" as defined in 47 U.S.C. § 522(4).

"**Company**" means Comcast of Kentucky/Tennessee/Virginia, a limited liability company validly existing under the laws of the State of Delaware, or lawful successor, transferee, designee, or assignee thereof.

"**FCC**" means the Federal Communications Commission, its designee, or any successor thereto.

"**Franchise Area**" means the incorporated areas of Hamblen County, Tennessee.

"**Franchising Authority**" means Hamblen County, Tennessee, or lawful successor, transferee, designee, or assignee thereof.

"**Gross Revenues**" means:

(A) all revenues received from Subscribers in the Franchise Area for providing Cable or Video Services, and all revenues received from nonsubscribers in the Franchise Area for advertising services and as commissions from home shopping services, as allocated pursuant to subdivision (B); provided, that the advertising or home shopping services are disseminated through Cable or Video Services. Gross Revenues shall be determined according to Generally Accepted Accounting Principles ("GAAP"). "Gross Revenues" shall not include any:

(i) tax, surcharge, or governmental fee, including franchise fees;

(ii) revenue not actually received, even if billed, such as bad debt;

(iii) revenue received by any affiliate or any other person in exchange for supplying goods or services to the service provider;

(iv) amounts attributable to refunds, rebates, or discounts;

(v) revenue from services provided over the Cable System or Video Service system that are associated with or classified as non-Cable or non-Video Services under federal law, including but not limited to revenues received from providing telecommunications services, information services other than Cable or Video Services, Internet access services, directory or Internet advertising services, including but not limited to yellow pages, white pages, banner, and electronic publishing advertising. Where the sale of any such non-Cable or non-Video Service is bundled with the sale of any Cable or Video Service or Services and sold for a single non-itemized price, the term "Gross Revenues" shall include only those revenues that are attributable to Cable or Video Services based on the provider's books and records;

DRAFT

(vi) revenue attributable to financial charges, such as returned check fees, late fees or interest;

(vii) revenue from the sale or rental of property, except such property the consumer is required to buy or rent exclusively from the service provider;

(viii) revenues from providing or maintaining an inside wiring plan;

(ix) revenue from sales for resale with respect to which the purchaser is required to pay a franchise fee, and the purchaser certifies in writing that it will resell the service and pay a franchise fee with respect thereto; and

(x) amounts attributable to a reimbursement of costs, including but not limited to the reimbursements by programmers of marketing costs incurred for the promotion or introduction of Video Programming; and

(B) with regard to Gross Revenues attributable to advertising revenues, or video home shopping services, the amount that is allocable the Franchise Area is equal to the total amount of the service provider's revenue received from the advertising and home shopping services multiplied by the ratio of the number of the provider's Subscribers located in the Franchise Area to the total number of the provider's Subscribers. The ratio shall be based on the number of the provider's Subscribers as of January 1 of the preceding year or more current Subscriber count at the provider's discretion, except that, in the first year in which services are provided, the ratio shall be computed as of the earliest practical date.

"**Person**" means any natural person or any association, firm, partnership, joint venture, corporation, or other legally recognized entity, whether for-profit or not-for-profit, but shall not mean the Franchising Authority.

"**Signal**" means any transmission of radio frequency energy or of optical information.

"**Streets**" means the surface of, and the space above and below, any and all streets, avenues, highways, boulevards, concourses, driveways, bridges, tunnels, parks, parkways, waterways, docks, bulkheads, wharves, piers, public grounds, and public places or waters within and belonging to the Franchising Authority and any other property within the Franchise Area to the extent to which there exist public easements or public rights-of-way.

"**Subscriber**" means any Person lawfully receiving Video Service from a Video Service Provider or Cable Service from a Cable Service Provider.

"**Video Programming**" means programming provided by or generally considered comparable to programming provided by a television broadcast station, as set forth in 47 U.S.C. § 522(20).

"**Video Service**" means the provision of Video Programming through wireline facilities located at least in part in the public rights-of-way without regard to delivery technology,

DRAFT

including Internet protocol technology. This definition does not include any Video Programming provided by a commercial mobile service provider as defined in 47 U.S.C. § 332(d) or Video Programming provided as part of, and via, a service that enables users to access content, information, electronic mail, or other services offered over the public Internet.

"**Video Service Provider**" or "**VSP**" means an entity providing Video Service as defined herein, but does not include a Cable Service Provider.

DRAFT

APPENDIX B
CUSTOMER SERVICE STANDARDS

Code of Federal Regulations

Title 47, Volume 4, Parts 70 to 79

Revised as of October 1, 1998

From the U.S. Government Printing Office via GPO Access

47 C.F.R. § 76.309

Page 561–63

TITLE 47—TELECOMMUNICATION

CHAPTER I—FEDERAL COMMUNICATIONS COMMISSION

PART 76—CABLE TELEVISION SERVICE

Subpart H—General Operating Requirements

§ 76.309 Customer service obligations.

(a) A cable franchise authority may enforce the customer service standards set forth in paragraph (c) of this section against cable operators. The franchise authority must provide affected cable operators ninety (90) days written notice of its intent to enforce the standards.

(b) Nothing in this rule should be construed to prevent or prohibit:

(1) A franchising authority and a cable operator from agreeing to customer service requirements that exceed the standards set forth in paragraph (c) of this section;

(2) A franchising authority from enforcing, through the end of the franchise term, pre-existing customer service requirements that exceed the standards set forth in paragraph (c) of this section and are contained in current franchise agreements;

(3) Any State or any franchising authority from enacting or enforcing any consumer protection law, to the extent not specifically preempted herein; or

(4) The establishment or enforcement of any State or municipal law or regulation concerning customer service that imposes customer service requirements that exceed, or address matters not addressed by the standards set forth in paragraph (c) of this section.

(c) Effective July 1, 1993, a cable operator shall be subject to the following customer service standards:

(1) Cable system office hours and telephone availability—

(i) The cable operator will maintain a local, toll-free or collect call telephone access line which will be available to its subscribers 24 hours a day, seven days a week.

(A) Trained company representatives will be available to respond to customer telephone inquiries during normal business hours.

DRAFT

(B) After normal business hours, the access line may be answered by a service or an automated response system, including an answering machine. Inquiries received after normal business hours must be responded to by a trained company representative on the next business day.

(ii) Under normal operating conditions, telephone answer time by a customer representative, including wait time, shall not exceed thirty (30) seconds when the connection is made. If the call needs to be transferred, transfer time shall not exceed thirty (30) seconds. These standards shall be met no less than ninety (90) percent of the time under normal operating conditions, measured on a quarterly basis.

(iii) The operator will not be required to acquire equipment or perform surveys to measure compliance with the telephone answering standards above unless an historical record of complaints indicates a clear failure to comply.

(iv) Under normal operating conditions, the customer will receive a busy signal less than three (3) percent of the time.

(v) Customer service center and bill payment locations will be open at least during normal business hours and will be conveniently located.

(2) Installations, outages and service calls. Under normal operating conditions, each of the following four standards will be met no less than ninety five (95) percent of the time measured on a quarterly basis:

(i) Standard installations will be performed within seven (7) business days after an order has been placed. “Standard” installations are those that are located up to 125 feet from the existing distribution system.

(ii) Excluding conditions beyond the control of the operator, the cable operator will begin working on “service interruptions” promptly and in no event later than 24 hours after the interruption becomes known. The cable operator must begin actions to correct other service problems the next business day after notification of the service problem.

(iii) The “appointment window” alternatives for installations, service calls, and other installation activities will be either a specific time or, at maximum, a four-hour time block during normal business hours. (The operator may schedule service calls and other installation activities outside of normal business hours for the express convenience of the customer.)

(iv) An operator may not cancel an appointment with a customer after the close of business on the business day prior to the scheduled appointment.

(v) If a cable operator representative is running late for an appointment with a customer and will not be able to keep the appointment as scheduled, the customer will be contacted. The appointment will be rescheduled, as necessary, at a time which is convenient for the customer.

DRAFT

(3) Communications between cable operators and cable subscribers—

(i) Notifications to subscribers—

(A) The cable operator shall provide written information on each of the following areas at the time of installation of service, at least annually to all subscribers, and at any time upon request:

(1) Products and services offered;

(2) Prices and options for programming services and conditions of subscription to programming and other services;

(3) Installation and service maintenance policies;

(4) Instructions on how to use the cable service;

(5) Channel positions programming carried on the system; and,

(6) Billing and complaint procedures, including the address and telephone number of the local franchise authority's cable office.

(B) Customers will be notified of any changes in rates, programming services or channel positions as soon as possible in writing. Notice must be given to subscribers a minimum of thirty (30) days in advance of such changes if the change is within the control of the cable operator. In addition, the cable operator shall notify subscribers thirty (30) days in advance of any significant changes in the other information required by paragraph (c)(3)(i)(A) of this section. Notwithstanding any other provision of Part 76, a cable operator shall not be required to provide prior notice of any rate change that is the result of a regulatory fee, franchise fee, or any other fee, tax, assessment, or charge of any kind imposed by any Federal agency, State, or franchising authority on the transaction between the operator and the subscriber.

(ii) Billing—

(A) Bills will be clear, concise and understandable. Bills must be fully itemized, with itemizations including, but not limited to, basic and premium service charges and equipment charges. Bills will also clearly delineate all activity during the billing period, including optional charges, rebates and credits.

(B) In case of a billing dispute, the cable operator must respond to a written complaint from a subscriber within 30 days.

(iii) Refunds—Refund checks will be issued promptly, but no later than either—

(A) The customer's next billing cycle following resolution of the request or thirty (30) days, whichever is earlier, or

(B) The return of the equipment supplied by the cable operator if service is terminated.

(iv) Credits—Credits for service will be issued no later than the customer's next billing cycle following the determination that a credit is warranted.

DRAFT

(4) Definitions—

(i) Normal business hours—The term “normal business hours” means those hours during which most similar businesses in the community are open to serve customers. In all cases, “normal business hours” must include some evening hours at least one night per week and/or some weekend hours.

(ii) Normal operating conditions—The term “normal operating conditions” means those service conditions which are within the control of the cable operator. Those conditions which are not within the control of the cable operator include, but are not limited to, natural disasters, civil disturbances, power outages, telephone network outages, and severe or unusual weather conditions. Those conditions which are ordinarily within the control of the cable operator include, but are not limited to, special promotions, pay-per-view events, rate increases, regular peak or seasonal demand periods, and maintenance or upgrade of the cable system.

(iii) Service interruption—The term “service interruption” means the loss of picture or sound on one or more cable channels.

[58 FR 21109, Apr. 19, 1993, as amended at 61 FR 18977, Apr. 30, 1996]

DRAFT

RESOLUTION #_____

A RESOLUTION TO AMEND THE ZONING MAP
OF HAMBLEN COUNTY, TENNESSEE, BY REZONING
DISTRICT 04, TAX MAP 050, PARCELS 069.07
3994 S. DAVY CROCKETT PARKWAY, MORRISTOWN, TN. 37813
FROM A-1 TO C-1
JUNE 21, 2018

WHEREAS, The Morristown City Planning Commission heard the request to Amend the Hamblen County Zoning Map from A-1 to C-1 on the parcel listed above located inside the Urban Growth Boundary:

WHEREAS, The Morristown City Planning Commission does recommend the rezoning request:

NOW, THEREFOR, BE IT RESOLVED that the Hamblen County Board of Commissioners does hereby approve the rezoning and map amendment from A-1 to C-1 according to the attached map.

Motion was made by _____

Second by _____

Voting For: Voting Against:

ATTEST:

_____

County Clerk

AUTHENTICATED:

_____

County Mayor

_____

Date

TENNESSEE
Hamblen County
SERVICE • COMMUNITY • INDUSTRY
OFFICE OF PLANNING AND ZONING

May 15 2018

Alvy Couch
P.O. Box 3142
Morristown, TN. 37815

RE: **REZONING**-3994 S. DAVY CROCKETT PARKWAY

Dear Mr. Couch,

You have recently made a request to have your property at 3994 S. Davy Crockett Parkway rezoned from A-1, Agricultural-Forestry District to a C-1, Commercial District. The reason for the request was to zone the property appropriately for the use taking place on the property. The existing use involves commercial storage, which is not a permitted use in the A-1 District. In order to continue this commercial operation, the property needs to be zoned accordingly with a commercial zoning designation. For that reason, the use and the zoning need to be consistent with each other in order to continue this commercial operation. Incidentally, the property is currently assessed at the commercial rate of forty percent so the rezoning would not affect your property taxes. In order to be in compliance with the Hamblen County Zoning Resolution, the property needs to be rezoned to a C-1, Commercial District.

Please contact our office within 30 days to resolve this matter.

If you have any questions, please contact the county zoning office at 423-581-1373 or Joe Barrett, (ETDD) at 865-273-6003. Our office hours are Monday through Friday from 8:00 a.m. until 4:30 p.m.

Sincerely,

Tina Whitaker

Tina Whitaker
Hamblen County Planning Commission
Department Manager

Hamblen County Planning Commission
511 West Second North Street • Morristown, TN 37814
• *office: 423.581.1373* • *fax. 423.587.7089*
www.HamblenCountyTN.gov

Return to Committee Cover Page

Return to Committee Cover Page

Morristown-Hamblen Humane Society, Inc.
Profit & Loss
April 2018

	Apr 18	Apr 17	Jul '17 - Apr 18
Ordinary Income/Expense			
Income			
3999 · Training / Education Refund	0.00	0.00	72.00
4000 · Adoption			
4001 · Fees	0.00	0.00	0.00
4002 · Refunds			
Vetting for Rescue refund.	0.00	0.00	85.00
4002 · Refunds - Other	0.00	-75.00	-115.00
Total 4002 · Refunds	0.00	-75.00	-30.00
4004 · Adoption - Pet Sense	105.00	190.00	1,865.00
4007 · Adoption - Puppy	710.00	990.00	18,340.00
4000 · Adoption - Other	2,255.00	1,660.00	17,320.00
Total 4000 · Adoption	3,070.00	2,765.00	37,495.00
4003 · Medical Fee	280.00	280.00	3,090.00
4005 · After Hours Pick-up Charge	100.00	25.00	450.00
4008 · Microchip Fee	460.00	520.00	5,940.00
4010 · Animal Pick-up - County	0.00	0.00	270.00
4015 · Animal Pickups - Vet	120.00	160.00	1,100.00
4020 · Boarding Fees	135.00	30.00	1,253.00
4030 · Citations	409.10	300.00	3,892.30
4040 · Donations			
4041 · Donations - AJ Fund	75.00	20.00	8,621.46
4042 · Building Fund	200.00	100.00	221,423.15
4044 · Pet Sense Red Box	0.00	0.00	506.51
4045 · Memorial	280.00	50.00	1,445.00
4048 · Rescue	0.00	0.00	85.00
4049 · Amazon	0.00	0.00	98.02
4040 · Donations - Other	2,034.96	996.00	14,207.37
Total 4040 · Donations	2,589.96	1,166.00	246,386.51
4060 · Euthanasia Fees	40.00	180.00	1,610.00
4061 · Animal Disposal Fee	50.00	40.00	430.00
4100 · Fundraising			
4103 · Fundraising Bake Sale	0.00	0.00	812.00
4107 · Smile Amazon	0.00	0.00	57.88
4117 · Fundraising - Boxes	520.99	0.00	9,408.95
4152 · Mama Mia	0.00	0.00	4,878.01
Total 4100 · Fundraising	520.99	0.00	15,156.84
4135 · T-shirts Income	21.00	76.00	702.00
4200 · Funds - City of Morristown	11,490.00	11,490.00	114,900.00
4210 · Funds - Hamblen County	11,125.00	11,125.00	111,250.00
4250 · Membership Fees	190.00	0.00	2,575.00

Morristown-Hamblen Humane Society, Inc.
Profit & Loss
April 2018

	Apr 18	Apr 17	Jul '17 - Apr 18
4270 · Rabies Vaccination Deposit	169.00	130.00	1,692.00
4280 · Reclaim Fee	725.00	415.00	4,559.00
4290 · Surrender Fee	390.00	235.00	3,410.00
4300 · Spay / Neuter			
4301 · Spay / Neuter Deposit	2,000.00	0.00	4,525.00
4302 · Spay / Neuter Refund	-350.00	-300.00	-2,905.00
4304 · Spay / Neuter - Deposit	-1,600.00	450.00	0.00
Total 4300 · Spay / Neuter	50.00	150.00	1,620.00
4400 · Frozen Cats	0.00	0.00	944.00
Total Income	31,935.05	29,087.00	558,797.65
Gross Profit	31,935.05	29,087.00	558,797.65
Expense			
Professional Fee	0.00	50.62	238.34
55555 · Christmas Bonus	0.00	0.00	435.94
6000 · Payroll Expense			
6010 · ACO	5,314.58	2,712.77	43,646.86
6020 · Admin	0.00	4,138.48	40,350.18
6030 · Office	3,123.30	2,735.83	44,784.00
6040 · Kennel	3,865.86	5,374.20	41,908.23
6100 · Payroll Tax Expense	1,050.07	1,480.07	14,602.54
Total 6000 · Payroll Expense	13,353.81	16,441.35	185,291.81
6400 · New Location			
6401 · Professional Fees	0.00	0.00	1,925.00
6402 · Bank Fees	0.00	0.00	61.90
6403 · Advertising	0.00	0.00	150.00
Total 6400 · New Location	0.00	0.00	2,136.90
6500 · MonthlyExpenses for New Shelter			
6501 · Utilities Gas	407.40	0.00	2,382.45
6502 · Utilities Electric N	64.41	0.00	2,390.20
6503 · Security Light	19.28	0.00	172.10
6504 · Garbage Fee	10.00	0.00	90.45
6505 · Metered Water	0.00	0.00	119.44
6506 · Sewage Fee	22.50	0.00	180.00
6507 · Utility Service Charge	0.00	0.00	35.53
6500 · MonthlyExpenses for New Shelter - Other	9.81	0.00	9.81
Total 6500 · MonthlyExpenses for New Shelter	533.40	0.00	5,379.98
7000 · Advertising	130.00	0.00	1,093.00

Morristown-Hamblen Humane Society, Inc.
Profit & Loss
April 2018

	Apr 18	Apr 17	Jul '17 - Apr 18
7001 · Refund on Adoption	0.00	0.00	90.00
7010 · Alarm Monitoring	20.00	0.00	496.36
7020 · Animal Care			
7021 · Animal Care Supplies	0.00	0.00	267.43
7024 · Kitty Litter	363.19	0.00	2,043.38
Total 7020 · Animal Care	363.19	0.00	2,310.81
7030 · Bank Charges	74.86	85.19	1,224.07
7035 · Bad Debt Expense	0.00	0.00	-195.30
7040 · Bookkeeping & Audit	1,000.00	0.00	2,029.99
7050 · Communications			
7051 · ACO Radios	230.43	165.08	1,726.34
7053 · Internet Service	24.98	0.00	258.00
7054 · Telephone	86.80	0.00	1,015.81
7055 · Web Site	0.00	0.00	18.17
Total 7050 · Communications	342.21	165.08	3,018.32
7060 · Computer / Software Supplies	0.00	0.00	449.98
7090 · Food - Animal	482.58	290.82	4,301.07
7110 · Insurance			
7112 · Auto	242.58	1,376.08	6,665.12
7113 · D&O Liability	710.00	0.00	2,840.00
7114 · Group Medical	34.03	-145.65	-359.11
7116 · Volunteer Accident Coverage	0.00	0.00	600.00
7117 · Workmen's Comp	323.00	0.00	2,243.00
7119 · Commercial Property	0.00	0.00	2,141.00
7127 · Group Life	0.00	93.51	93.51
7110 · Insurance - Other	0.00	0.00	1,222.58
Total 7110 · Insurance	1,309.61	1,323.94	15,446.10
7120 · Landfill Fees			
7121 · TIDI Dumpster	173.17	160.35	1,667.60
7120 · Landfill Fees - Other	26.60	28.00	156.45
Total 7120 · Landfill Fees	199.77	188.35	1,824.05
7122 · Group Dental/Vision	0.00	104.97	314.91
7130 · Legal Fees	494.50	60.00	7,091.47
7140 · License & Fees	110.00	0.00	840.11
7150 · Meals			
7152 · Inmates	575.19	568.02	6,161.67
Total 7150 · Meals	575.19	568.02	6,161.67
7159 · Medicine / Medical			
1759.5 · -Petsmart Grant Medicine / Med	0.00	0.00	1,476.21
7160 · Medicine / Medical Supplies	549.99	1,225.28	17,831.03

Morristown-Hamblen Humane Society, Inc.
Profit & Loss
April 2018

	Apr 18		Apr 17		Jul '17 - Apr 18	
7161 · Reimbursement	0.00		0.00		-36.74	
7159 · Medicine / Medical - Other	83.14		79.33		1,178.22	
Total 7159 · Medicine / Medical		633.13		1,304.61		20,448.72
7169 · Microchip						
7170 · Microchip Supplies	0.00		0.00		6,033.96	
7171 · Reimbursement	0.00		0.00		10.00	
7169 · Microchip - Other	0.00		0.00		-0.01	
Total 7169 · Microchip		0.00		0.00		6,043.95
7200 · Office Expenses		48.20		2.30		1,154.34
7210 · Penalties & Late Fees		0.00		0.00		1,102.07
7220 · Postage		114.70		0.00		291.02
7230 · Repairs & Maintenance						
7231 · Equipment	0.00		9.16		3,199.62	
7232 · Property	0.00		0.00		24.08	
7230 · Repairs & Maintenance - Other	100.00		0.00		100.00	
Total 7230 · Repairs & Maintenance		100.00		9.16		3,323.70
7240 · Supplies						
7242 · Cleaning	216.96		66.52		2,586.18	
7243 · Office						
7240a · Shipping Expense	0.00		0.00		27.30	
7243 · Office - Other	216.08		159.94		1,566.33	
Total 7243 · Office	216.08		159.94		1,593.63	
7244 · Kennel Supplies						
7244a · Pest Control	70.00		70.00		822.00	
7244 · Kennel Supplies - Other	236.58		0.00		2,103.76	
Total 7244 · Kennel Supplies	306.58		70.00		2,925.76	
7245 · Condiments	0.00		109.77		695.30	
7240 · Supplies - Other	0.00		0.00		390.02	
Total 7240 · Supplies		739.62		406.23		8,190.89
7250 · Taxes						
7251 · Property Tax						
4251.1 · New Shelter Locations	0.00		0.00		674.00	
7251 · Property Tax - Other	0.00		0.00		275.00	
Total 7251 · Property Tax	0.00		0.00		949.00	
7250 · Taxes - Other	0.00		0.00		482.26	

Morristown-Hamblen Humane Society, Inc.
Profit & Loss
April 2018

	Apr 18		Apr 17		Jul '17 - Apr 18	
Total 7250 · Taxes		0.00		0.00		1,431.26
7252 · Taxes & Fees		0.00		0.00		32.39
7255 · Training / Education		-250.00		0.00		594.10
7260 · Transportation						
7261 · Fuel						
Fuel- ACO Truck	686.94		681.60		3,970.81	
7261 · Fuel - Other	0.00		0.00		2,111.84	
Total 7261 · Fuel		686.94		681.60		6,082.65
7263 · Repair & Maintenance		579.84		0.00		913.24
Total 7260 · Transportation		1,266.78		681.60		6,995.89
7270 · Uniforms		0.00		0.00		0.00
7280 · Utilities						
7281 · Electric		816.28		701.00		8,655.28
7282 · Utilities Security light		0.00		364.00		701.30
7283 · Gas		708.52		334.72		2,584.41
Total 7280 · Utilities		1,524.80		1,399.72		11,940.99
7300 · Veterinary Fees						
7310 · Regular Vet Fees		140.00		155.00		4,567.96
7315 · Veterinary Fees Rabies Certific		0.00		0.00		676.00
7316 · Spay & Neuter						
Spay & Neuter Grants	0.00		0.00		928.00	
7317 · Spay/Neuter Red Box Grant	0.00		0.00		400.00	
7316 · Spay & Neuter - Other	300.00		260.00		12,759.30	
Total 7316 · Spay & Neuter		300.00		260.00		14,087.30
7318 · Cruelty Case		0.00		0.00		415.00
7320 · Special Medical		0.00		0.00		68.59
7300 · Veterinary Fees - Other		0.00		0.00		2,596.42
Total 7300 · Veterinary Fees		440.00		415.00		22,411.27
7304 · Claw & Paw 4 The Cause Mobile		180.00		0.00		3,380.00
7600 · Fundraising Expense						
7610 · Fundraising Bake Sale Expense		0.00		0.00		16.76
7612 · Motorcycle Ride		0.00		0.00		344.98
7635 · T-shirt Expenses		0.00		0.00		507.00
7636 · Mama Mia		0.00		0.00		382.74
7600 · Fundraising Expense - Other		0.00		42.00		-70.00
Total 7600 · Fundraising Expense		0.00		42.00		1,181.48
Total Expense		23,786.35		23,538.96		328,501.65

Morristown-Hamblen Humane Society, Inc.
Profit & Loss
April 2018

	Apr 18	Apr 17	Jul '17 - Apr 18
Net Ordinary Income	8,148.70	5,548.04	230,296.00
Other Income/Expense			
Other Income			
8040 · Gain / Loss on Investments	0.00	0.00	-26,624.67
8050 · Interest Income	17.52	2.50	171.35
8070 · Insurance refund	300.00	0.00	300.00
8090 · Grants			
8091 · Grants - Spay Neuter	0.00	0.00	320.00
8090 · Grants - Other	0.00	0.00	37,220.00
Total 8090 · Grants	0.00	0.00	37,540.00
Total Other Income	317.52	2.50	11,386.68
Other Expense			
Late fees & charges	6.42	0.00	12.94
5555 · Contract Labor	550.00	273.50	33,494.00
9010 · Rescue Van Expenses			
9011 · Rescue Van - Fuel	0.00	0.00	0.00
Total 9010 · Rescue Van Expenses	0.00	0.00	0.00
9091 · Reimbursement Misc Expense	0.00	0.00	150.00
Total Other Expense	556.42	273.50	33,656.94
Net Other Income	-238.90	-271.00	-22,270.26
Net Income	**7,909.80**	**5,277.04**	**208,025.74**

Morristown-Hamblen Humane Society, Inc.
Expenses by Vendor Summary
April 2018

	Apr 18	Apr 17	Jul '17 - Apr 18
A-Z Office Resources, Inc.	0.00	125.00	0.00
ABC Check Printing	0.00	0.00	110.66
Access Technology Group, INC	0.00	50.62	219.37
Acme Printing	130.00	0.00	130.00
Aimee Sykes	0.00	0.00	50.00
Amanda Ford	0.00	50.00	0.00
Amazon	320.00	0.00	2,716.66
Amos Huggins	50.00	0.00	50.00
Andrew Bacon	0.00	0.00	50.00
Angel Oakley	0.00	0.00	119.17
Animal Hospital	0.00	0.00	7,420.11
Animal Medical Center of Greeneville	0.00	0.00	73.00
Appalachian Animal Hospital	0.00	0.00	74.00
Ashlee Barnholdt	0.00	0.00	100.00
Ashley Roberts	0.00	75.00	0.00
Ashley Williamson	0.00	0.00	50.00
Ashton Britt Service Company Inc.	0.00	0.00	589.10
AT&T	230.43	165.08	1,666.34
Atmos Energy	1,115.92	334.72	4,966.86
Benchmark Insurance Co.	0.00	663.00	1,917.00
Bill Luttrell	0.00	0.00	50.00
BlueCross BlueShield of Tennessee	104.97	104.97	1,049.70
Brande Voiles	0.00	0.00	50.00
Brenda Navarro	0.00	0.00	3,200.00
Carol Crotty	0.00	0.00	110.00
Carolyn Joyce	0.00	0.00	50.00
Carrie Ealy	0.00	0.00	50.00
Chad Gibson	0.00	0.00	50.00
Charity Berry	0.00	0.00	50.00
Chelsea Fogal	0.00	273.50	1,717.00
Christopher Johns	0.00	0.00	50.00
City of Morristown	0.00	0.00	599.16
Cook's Pest Control	70.00	70.00	822.00
Crystal Westmoreland	0.00	0.00	50.00
Department of Health	110.00	0.00	110.00
Diane Herndon	0.00	50.00	0.00
Divanni Hernandez	0.00	0.00	50.00
Donna Lindsey	0.00	0.00	50.00
Doyle Bibbins	0.00	0.00	540.00
Dr. Amanda D. Dykstra Wessel	550.00	0.00	2,787.50
DRE Medical Equipment	0.00	0.00	0.00
Dustin Canter	50.00	0.00	50.00
Edward Wolf	0.00	0.00	50.00
Ellen Pillsbury	0.00	0.00	35.00
Estrella Hernandez	0.00	0.00	50.00
Express Health Clinic	38.00	0.00	76.00
Express Lane	0.00	0.00	386.33
Federated Auto Parts	0.00	9.16	172.15
First Impressions Printing	0.00	0.00	120.00
Fleetcore Fuel	0.00	0.00	39.77
Frankenmuth Insurance	952.58	713.08	9,407.70
Fuelman	686.94	681.60	6,075.27
Ginger Myers	0.00	0.00	50.00
GO Daddy	0.00	0.00	18.17
Goodhire.com	0.00	0.00	109.98
Greg Oparyk	0.00	0.00	50.00
Hamblen Co/Morristown Solid Waste	26.60	28.00	156.45
Hamblen County Trustee	0.00	0.00	949.00
Hines and Company	1,000.00	0.00	2,000.00
Home Depot	58.03	0.00	208.21
hometrust bank	0.00	0.00	61.90
Humane Society of Tennessee	0.00	0.00	2,840.00
Hyatt Place Nashville TN	0.00	0.00	594.10
Internal Revenue Service	0.00	0.00	1,102.07
Intervet	0.00	0.00	6,940.94
Intuit	0.00	0.00	162.46

Morristown-Hamblen Humane Society, Inc.
Expenses by Vendor Summary
April 2018

	Apr 18	Apr 17	Jul '17 - Apr 18
Janie Sexton	0.00	0.00	50.00
Jared Cross	50.00	0.00	50.00
Jeffrey Sweet	0.00	0.00	50.00
Joe Peralez	0.00	0.00	10,245.00
Johnson & Johnson	0.00	0.00	1,294.00
Jose. Rojas	0.00	0.00	78.00
Junior Bewley	0.00	0.00	50.00
Kathy Stolica	0.00	0.00	50.00
Katy Tiller	0.00	0.00	110.00
Kristi Bush	0.00	0.00	50.00
Kristi Crippen	0.00	50.00	0.00
Lakeway Animal Hospital	0.00	155.00	625.00
Laundry Systems of Tennessee	0.00	0.00	1,191.01
Life Insurance Company of Alabama	63.26	93.51	693.10
Link A Gibbons	0.00	0.00	2,500.00
Lisa Bryant	0.00	0.00	50.00
lisa Lawrence	0.00	0.00	50.00
Mac Cody	0.00	0.00	50.00
Makensie Jones	0.00	0.00	50.00
McKenlee Hall	0.00	0.00	3,134.50
Med-Vet International	0.00	711.13	3,253.23
Melissa Kelley	0.00	0.00	90.00
Meshelle Robbins	0.00	0.00	50.00
MHHS Petty Cash	180.00	0.00	3,380.00
Michael D. Price AIA	0.00	0.00	6,000.00
Michelle Collier	0.00	0.00	50.00
Midwest Veterinary Supply, Inc.	0.00	0.00	2,902.31
Mildred Yvonne Swiney	0.00	50.00	0.00
Miranda Malone	0.00	0.00	50.00
Morristown Animal Hospital, PC	0.00	0.00	1,754.00
Morristown Chamber of Commerce	0.00	0.00	260.00
Morristown Milling Co.	0.00	0.00	502.25
Morristown Signs	0.00	0.00	579.00
Morristown Utilities	948.70	1,065.00	12,212.53
Morristown Utility System	0.00	0.00	148.00
Moyers Veterinary Hospital	145.00	105.00	780.00
Mr. Herbert Carpenter	0.00	0.00	50.00
Mr. Lawrence England	0.00	0.00	50.00
Mr. Mark Rader	0.00	0.00	50.00
Mr. Paul Howard	0.00	0.00	494.42
Mr. Phillip Watkins	0.00	0.00	50.00
Ms. Katy Helton	50.00	0.00	50.00
Ms. Lisa Hartman	0.00	0.00	175.00
Murrell Burglar Alarms	20.00	0.00	496.36
MUS Fibernet	111.78	0.00	1,092.16
Pam Velder	0.00	0.00	688.30
Pebbles McCoy	0.00	50.00	0.00
Petty Cash	713.89	570.32	6,990.09
Philadelphia Insurance Company	0.00	0.00	300.00
Porter's Tire Stores, Inc.	15.95	0.00	349.35
Postmaster General	0.00	0.00	98.00
Precision Automotive	563.89	0.00	890.63
Price & Ramey Group	0.00	0.00	550.00
QuickBooks Payroll Service	5.25	0.00	490.23
Rachel Winstead	50.00	0.00	50.00
Raeleen L Whitaker	0.00	0.00	750.00
Randy Everhart	0.00	0.00	13.00
Revival Animal Health	549.99	0.00	2,605.12
Ridgefield Animal Hospital	0.00	0.00	1,022.00
Rix Copies	0.00	0.00	246.00
Rogersville Animal Hospital	0.00	0.00	75.80
Samantha Gray	0.00	0.00	50.00
Sandra Dunn	0.00	0.00	50.00
Scott Hayes	0.00	0.00	50.00
Screen Designs	0.00	42.00	507.00
Shannon Nuttall	0.00	0.00	50.00

Morristown-Hamblen Humane Society, Inc.
Expenses by Vendor Summary
April 2018

	Apr 18	Apr 17	Jul '17 - Apr 18
Sharon Love	0.00	0.00	5,000.00
Shawn Brooks	0.00	0.00	50.00
Sheila. Jackson	0.00	0.00	109.74
Shelter Planners of America	0.00	0.00	1,925.00
Slimware Holdings	0.00	0.00	29.97
Southern Care Veterinary Hospital	295.00	0.00	6,673.77
southern Global Refrigeration	0.00	0.00	469.41
Specialties, Inc	0.00	0.00	267.43
State of Tennessee	0.00	0.00	482.26
State of Tennessee, Corporate Filings	0.00	0.00	20.95
Stericycle, Inc.	83.14	79.33	797.11
Tabitha Shelley	0.00	0.00	50.00
Tammy Degregoio	0.00	0.00	50.00
The Argos Group	323.00	0.00	2,243.00
The Mail Station	86.20	0.00	180.20
Tim Schneider	0.00	0.00	50.00
Tina Cook	0.00	0.00	85.00
Tina Grooms	0.00	0.00	50.00
Tina Parks	50.00	0.00	50.00
Tina Pugh	0.00	0.00	50.00
TN Department of Labor & Workforce Develo	0.00	190.31	278.64
Tractor Supply Credit Plan	363.19	175.92	2,059.36
Travis &/or Jessica Anders	0.00	50.00	0.00
Tri-County Animal Clinic	0.00	0.00	35.00
Tyler & Chasli Keister	0.00	0.00	50.00
Uline	0.00	0.00	255.09
Volunteer Party Rental	0.00	0.00	50.00
Vortech Pharmaceuticals LTD	0.00	0.00	680.93
Wal-Mart Community	774.17	326.13	7,815.19
Waste Industries	173.17	160.35	1,667.60
Wayman Skelton	0.00	0.00	23.64
Wayne R. Stambaugh, ATTY.	494.50	60.00	874.50
Wendi Whitlock	50.00	0.00	50.00
Wendy Daniels	0.00	0.00	50.00
White Pine Veterinary Practice	0.00	155.00	670.00
Wimberly Lawson Wright Daves & Jones, PLL	0.00	0.00	3,716.97
Zoetis	0.00	514.15	10,785.87
TOTAL	**11,653.55**	**7,996.88**	**181,855.15**

TENNESSEE
Hamblen County
SERVICE • COMMUNITY • INDUSTRY

PERSONNEL COMMITTEE

Hubert Davis
Chairman

Joe Huntsman, Sr.
Vice-Chairman

Louis "Doe" Jarvis
Ex-Officio

Randy DeBord
Member

Stancil Ford
Member

Herbert Harville
Member

John Smyth
Member

Hamblen County Government
PERSONNEL COMMITTEE

Monday, June 11, 2018
Immediately Following Adjournment of Public Services Committee
Rose Center – Prater Hall

AGENDA

1. **Call to Order** – *Chairman Hubert Davis*

2. **Visitors Wishing to Address the Committee** – *Chairman Hubert Davis*

3. **Old Business** – *Chairman Hubert Davis*
   a. None

4. **New Business** – *Chairman Hubert Davis*
   a. Approval of Longevity and Military Pay Submissions

5. **Items of Interest (No Action Necessary)** – *Chairman Hubert Davis*
   a. None

6. **Adjournment** – *Chairman Hubert Davis*

HAMBLEN COUNTY, TENNESSEE
OFFICE OF COUNTY MAYOR
LONGEVITY APPLICANTS PRESENTED TO PERSONNEL COMMITTEE ON
June 11, 2018

LONGEVITY

Last Name	First Name	Hire Date	Years of Service	Amount
Rouse	David	5/20/2013	5	$ 375.00
Witt	Ronnie	6/2/2015	3	$ 225.00

MILITARY

Last Name	First Name	Military	Years of Service	Amount
Underwood	Frederick	2 - 10 Years	4 Years	$ 350.00

Return to Committee Cover Page

Hamblen County Government
CALENDAR & RULES COMMITTEE

Monday, June 11, 2018
Immediately Following Adjournment of Personnel Committee
Rose Center – Prater Hall

TENNESSEE
Hamblen County
SERVICE • COMMUNITY • INDUSTRY
CALENDAR & RULES COMMITTEE

Herbert Harville
Chairman

Rick Eldridge
Vice-Chairman

Louis "Doe" Jarvis
Ex-Officio

Hubert Davis
Member

Randy DeBord
Member

Joe Huntsman, Sr.
Member

Howard Shipley
Member

AGENDA

1. **Call to Order** – *Chairman Herbert Harville*

2. **Visitors Wishing to Address the Committee** – *Chairman Herbert Harville*
   (Visitors will be allotted 5 minutes to speak)

3. **Old Business -** *Chairman Herbert Harville*
   a. None

4. **New Business** - *Chairman Herbert Harville*
   a. Review of Regular Calendar Items
   b. Review of Consent Calendar Items

5. **Items of Interest**
   a. None

6. **Adjournment** – *Chairman Herbert Harville*

HAMBLEN COUNTY LEGISLATIVE BODY

Regularly Scheduled Monthly Meeting
Thursday, June 21, 2018
5 p.m.

Open Meeting - *Sheriff Esco Jarnagin*

Call to Order - *Chairman Louis "Doe" Jarvis*

Prayer – *TBD*

Pledge of Allegiance - *Commissioner Larry Carter*

Roll Call - *County Clerk Penny Petty*

Prepared under the direction of:
Chairman Louis "Doe" Jarvis

DRAFT

Order #	Vote	Item
1		**Recognition/Presentations/Proclamations (Commission Chairman Louis "Doe" Jarvis)**
		a. Employee Years of Service
2		**Public Comment Regarding Business of the Agenda Only (Commission Chairman Louis "Doe" Jarvis)**
3		**RECESS as Hamblen County Legislative Body – OPEN Public Hearing (Commission Chairman)**
		a. Resolution 18-_____ to Amend the Zoning Map of Hamblen County, Tennessee, by Rezoning District 04, Tax Map 050, Parcels 069.07, 3994 S. Davy Crockett Parkway, Morristown, TN,37813 from A-1 to C-1.
		CLOSE Public Hearing, Reconvene as Hamblen County Legislative Body (Commission Chairman)
4		**Rezoning Resolution Vote (Commission Chairman)**
	Vote	a. Resolution 18-_____ to Amend the Zoning Map of Hamblen County, Tennessee, by Rezoning District 04, Tax Map 050, Parcels 069.07, 3994 S. Davy Crockett Parkway, Morristown, TN,37813 from A-1 to C-1.
5		**Calendar and Rules Committee Report (Chairman Herbert Harville)**
	Vote	a. Approval of Consent Calendar Items
	Vote	b. Approval of Regular Calendar Items
6		**Approval of Consent Calendar (Commission Chairman Louis "Doe" Jarvis)**
	Vote	a. Consent Calendar
7		**Finance Committee (Chairman Randy DeBord)**
	Vote	a. Monthly Checks May 2018
	Vote	b. Resolution 18-_____ to Waive the County Motor Vehicle Tax for Volunteer Firefighters and Rescue Squad Personnel (1st Reading)
	Vote	c. Memorandum of Agreement Between the Tennessee Department of Transportation and Hamblen County (Flashing Beacons at Union Heights Elementary School)
	Vote	d. Memorandum of Understanding Between the Hamblen County Board of Education and Hamblen County Government (Flashing Beacons at Union Heights Elementary School)
	Vote	e. E-911 Reimbursement Health Insurance Plan
	Vote	f. Hamblen County Board of Education – Lease of Modular Classrooms
		g. Budget Amendments
	Vote	I. Fund #101 General Fund Various (#1)
	Vote	II. Fund #101 General Fund Various (#2)
	Vote	III. Fund #101 Archives $34
	Vote	IV. Fund #101 Civil Defense $350
	Vote	V. Fund #101 Other Public Safety $800
	Vote	VI. Fund #116 Sanitation $26,700
	Vote	VII. Fund #116 Sanitation $23,700
	Vote	VIII. Fund #116 Sanitation $30,000
	Vote	IX. Fund #122 Drug Enforcement $5,510
	Vote	X. Fund #131 Highway Department $39,000
	Vote	XI. Fund #131 Highway Department $20,912
	Vote	XII. Fund #131 Highway Department $6,300
	Vote	XIII. Fund #131 Highway Department $3,000
	Vote	XIV. Fund #131 Highway Department $710
	Vote	XV. Fund #151 General Debt Service $55,540
	Vote	XVI. Hamblen County Board of Education Amendment #4 $25,600
	Vote	XVII. Hamblen County Board of Education Amendment #5 $25,060
8		**Public Services (Chairman Hubert Davis)**
	Vote	a. Franchise Agreement between Hamblen County, Tennessee and Comcast of Kentucky/Tennessee/Virginia, LLC
9		**Public Comment – General (Commission Chairman Louis "Doe" Jarvis)**
10		**Announcements /Informational Items /Upcoming Meeting Dates (Commission Chairman Louis "Doe" Jarvis)**
		a. Special Called Commission Meeting: 6/28/18 @ 5:00 p.m. at Courthouse Large Courtroom
		b. July Committee Meetings: 7/9/18 @ 11:30 a.m. at Health Department Conference Room
		c. July County Commission Meeting: 7/19/18 @ 5 p.m. at Courthouse Large Courtroom
11		**Adjournment (Commission Chairman Louis "Doe" Jarvis)**

DRAFT

CONSENT CALENDAR

Order #	Item	Placed From
1	Approval of the Previous Month's Minutes – May 24, 2018	Commission Chairman
2	Approval of Notaries	County Clerk Penny Petty
3	Expenditure Reports – May 2018	Finance Committee
4	Planning Commission Building Permit Log – May 2018	Finance Committee
5	County Attorney Invoices – May 2018	Finance Committee
6	Coroner's Monthly Report – May 2018	Finance Committee
7	Budget Amendments Approved by the County Mayor a. Fund #101 Civil Defense $300 b. Fund #101 Data Processing $9,259 c. Fund #101 Election Commission $2,500 d. Fund #101 Election Commission $500 e. Fund #101 Jail $4,150 f. Fund #101 Juvenile Court $1,000 g. Fund #101 Property Assessor $500 h. Fund #101 Property Assessor/Reappraisal Program $2,000 i. Fund #101 Sheriff's Department $500 j. Fund #101 Trustee $2,103.08 k. Fund #116 Sanitation $460 l. Fund # 131 Highway Department $5,000	Finance Committee
8	Morristown Hamblen Humane Society - Reports	Public Services Committee
9	Longevity/Military Pay Submission	Personnel Committee

Thursday, June 21, 2018

DRAFT